FlowCon international

Pressure Independent Control Valves
Total Authority

Dynamic Balancing Valves

CERTIFICATES

PRESSURE INDEPENDENT CONTROL VALVES

FlowCon Green

- Pressure independent control valves (PICV)
- Adjustable to 41 different maximum flow rate limits for each control range
- Analog, 3-point floating or 2-position
- Optional feedback
- Optional pressure/temperature plugs
- Range of union end connections available or fixed end female-by-female threaded depending on body
- Sizes: 15-40mm (1/2”-1 1/2”)
- Maximum flow rate range: 0.0089-1.29 l/sec (0.141-20.4 GPM)

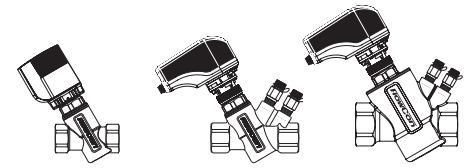

Green.0/1 with A *Green.0/1 with AB* *Green.2 with AB*

DYNAMIC SELF-BALANCING MODULATING CONTROL VALVES

FlowCon SM Valve, Union End Connections

- Dynamic Self-balancing modulating control valve, total authority, pressure independent
- Adjustable to 51 different maximum flow rate limits for each size and control range
- Analog or 3-point floating
- Standard feedback
- Standard LED display of position; optional fail safe function
- External programming of all settings, interface with push-buttons and display; optional fail safe function
- Optional BACnet version
- Optional pressure/temperature plugs
- Range of union end connections available
- Sizes: 15-40mm (1/2”-1 1/2”)
- Maximum flow rate range: 0.176-2.34 l/sec (2.79-37.1 GPM)

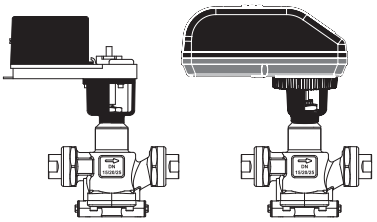

FlowCon SM Wafer, Flange Connections

- Dynamic Self-balancing modulating control valve, total authority, pressure independent
- Adjustable to 51 different maximum flow rate limits for each size and control range
- Analog, 3-point floating or 2-position
- Standard feedback
- External programming of all settings, interface with push-buttons and display; optional fail safe function
- Optional BACnet version
- Standard pressure/temperature plugs
- Flange connections
- Sizes: 50-150mm (2”-6”)
- Maximum flow rate range: 1.48-29.5 l/sec (23.4-468 GPM)

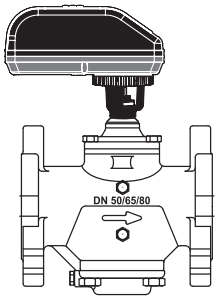

AUTOMATICALLY BALANCED TEMPERATURE CONTROL VALVES

FlowCon EVS

- Dynamic balancing valve with temperature control
- Accessible stainless steel cartridge
- ON/OFF or analog control
- Optional pressure/temperature plugs
- Range of union end connections available or fixed end female-by-female threaded depending on body
- Sizes: 15-25mm (1/2”-1”)
- Flow rate range: 0.0210-0.631 l/sec (0.333-10.0 GPM)

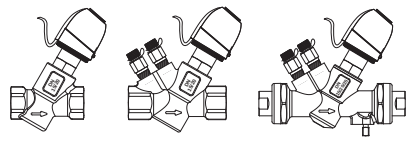

EVS with A *EVS with AB* *EVS with ABV1*

FlowCon EVC

- Dynamic balancing valve with temperature control
- Accessible, adjustable composite cartridge
- ON/OFF or analog control
- Optional pressure/temperature plugs
- Range of union end connections available on inlet; female threaded outlet
- Sizes: 15mm and 20mm (1/2” and 3/4”)
- Flow rate range: 0.0081-0.408 l/sec (0.128-6.46 GPM)

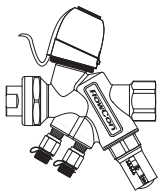

FlowCon ABM

- Electrically actuated two-way control valve with Optimizer® and dynamic balancing
- Accessible, adjustable composite cartridge
- Analog, 3-point floating or 2-position
- Optional pressure/temperature plugs
- Range of union end connections available
- Sizes: 15-40mm (1/2”-1 1/2”)
- Flow rate range: 0.0081-1.62 l/sec (0.128-25.6 GPM)

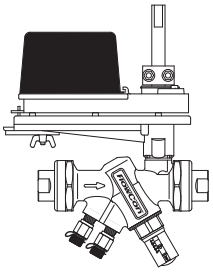

ADJUSTABLE CARTRIDGE AUTOMATIC BALANCING VALVES

FlowCon A

- Dynamic balancing valve
- Accessible, adjustable composite cartridge
- Female-by-female threaded
- Sizes: 15-25mm ISO (1/2” and 3/4” NPT)
- Flow rate range: 0.0081-0.408 l/sec (0.128-6.46 GPM)

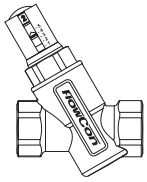

FlowCon AB

- Dynamic balancing valve
- Accessible, adjustable composite cartridge
- Optional pressure/temperature plugs
- Female-by-female threaded
- Sizes: 15-50mm (1/2”-2”)
- Flow rate range: 0.0081-4.48 l/s (0.128-70.9 GPM)

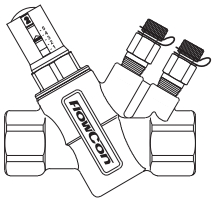

FlowCon ABV

- Dynamic balancing valve with built-in isolation ball valve
- Accessible, adjustable composite cartridge
- Optional pressure/temperature plugs
- Range of union end connections available
- Sizes: 15-40mm (1/2”-1 1/2”)
- Flow rate range: 0.0081-1.62 l/sec (0.128-25.6 GPM)

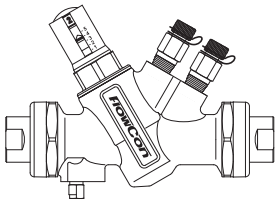

EXTERNALLY ADJUSTABLE AUTOMATIC BALANCING VALVES

FlowCon SH Valve, Union End Connections

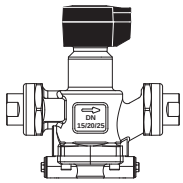

- Externally adjustable dynamic balancing valve
- Adjustable to 51 different flow rate settings for each size and control range
- Optional pressure/temperature plugs
- Range of union end connections available
- Sizes: 15-40mm (1/2”-1 1/2”)
- Flow rate range: 0.075-1.95 l/sec (1.2-30.9 GPM)

FlowCon SH Wafer, Flange Connections

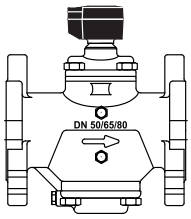

- Externally adjustable dynamic balancing valve
- Adjustable to 51 different flow rate settings for each size and control range
- Standard pressure/temperature plugs
- Flange connections
- Sizes: 50-150mm (2”-6”)
- Maximum flow rate range: 1.48-29.5 l/sec (23.4-468 GPM)

PRE-SET AUTOMATIC BALANCING VALVES 15-80MM

FlowCon Pure

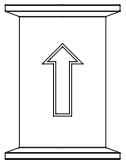

- Dynamic balancing valve with pre-set built-in flow limiter
- AISI 316(L)
- For Tri-Clover connections
- Sizes: 40mm and 50mm (1 1/2” and 2”), clamp ferrules
- Flow rate range: 0.208-3.15 l/sec (3.3-49.8 GPM)

FlowCon K

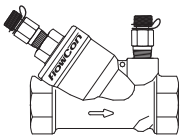

- Dynamic balancing valve
- Accessible, removable pre-set stainless steel cartridge
- Optional pressure/temperature plugs
- Female-by-female threaded connection
- Sizes: 15-80mm (1/2”-3”)
- Flow rate range: 0.021-10.1 l/sec (0.333-160 GPM)

PRE-SET AUTOMATIC BALANCING VALVES 50-800MM

FlowCon AHU Wafer

- Dynamic balancing valve
- Removable pre-set 3” stainless steel cartridge
- Standard pressure/temperature plugs
- For ANSI B 16.5 150 lb. or 300 lb. Class flanges (compatible with DIN EN1092-1, PN10 and higher)
- Sizes: 50-80mm (2”-3”)
- Flow rate range: 0.883-10.1 l/sec (14.0-160 GPM)

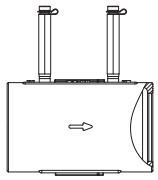

FlowCon Wafer

- Dynamic balancing valve, multiple cartridges
- Removable pre-set 3” stainless steel cartridges
- Standard pressure/temperature plugs
- For ANSI B 16.5 150 lb. or 300 lb. Class flanges (compatible with DIN EN1092-1, PN25/PN40)
- Sizes: 100-900mm (4”-36”)
- Flow rate range: 0.883-1222.2 l/sec (14.0-19400 GPM)

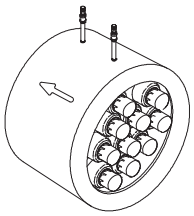

FlowCon Uni-Flange

- Dynamic balancing valve, multiple cartridges
- Accessible, removable pre-set 2” stainless steel cartridge(s)
- Standard pressure/temperature plugs
- For ANSI B 16.5 150 lb. Class flanges
- Size: 65/80mm (2 1/2”/3”)
- Flow rate range: 0.757-21.6 l/sec (12.0-342 GPM)

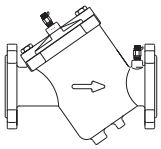

FlowCon Grooved End

- Dynamic balancing valve, multiple cartridges
- Removable pre-set 3” stainless steel cartridge(s)
- Standard pressure/temperature plugs
- Grooved end connection
- Sizes: 50-500mm (2”-20”)
- Flow rate range: 0.883-429 l/sec (14.0-6800 GPM)

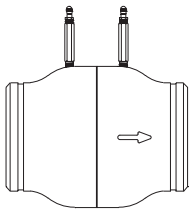

INSERTS / CARTRIDGES

FlowCon Green Inserts

- Please see under section 2.

FlowCon E-JUST Cartridges

- Externally adjustable composite cartridge, adjustable with a FlowCon key to one of 41 different flow rates
- dP-range: 17-400 kPaD (2.5-58 psid)
- Sizes: 20mm, 40mm and 50mm (3/4”, 1 1/2” and 2”)
- Flow rate: 0.0278-4.48 l/sec (0.440-70.9 GPM)

FlowCon Composite Cartridges

- Internally adjustable composite cartridge, adjustable with an allen wrench to one of 8 different flow rates
- dP-range: 15-410 kPaD (2.2-59.5 psid)
- Sizes: 20mm and 40mm (3/4” and 1 1/2”)
- Flow rate: 0.0081-1.43 l/sec (0.128-22.7 GPM)

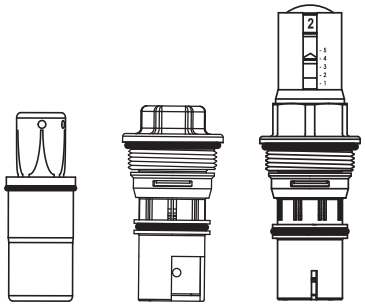

FlowCon Stainless Steel Cartridges

- Factory pre-set stainless steel cartridge, AISI 304
- dP-range: 10-880 kPaD (1-128 psid)
- Sizes: 20mm, 40mm, 50mm and 80mm (3/4”, 1 1/2”, 2” and 3”)
- Flow rate: 0.0210-12.6 l/sec (0.333-200 GPM)

DIFFERENTIAL PRESSURE CONTROL VALVES

FlowCon DPCV

- Differential pressure control valve
- Adjustable to 7 different controlled dP settings for each size
- Optional pressure/temperature plugs
- ISO sizes: 15-50mm (1/2”-2”)
- Controlled dP rate: 5, 10, 15, 20, 25, 30 and 35 kPaD (0.7, 1.5, 2.2, 2.9, 3.6, 4.4 and 5.1 psid)

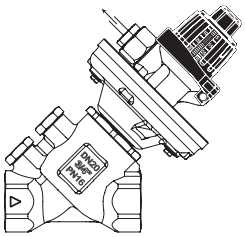

THERMOSTATIC CONTROL VALVE

FlowCon T-JUST

- Thermostatic control valve
- Fits in a range of FlowCon valve bodies
- Size: 20mm (3/4”)
- Temperature range: +35°C to +65°C

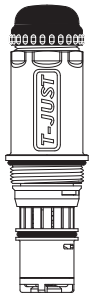

BY-PASS UNITS, STRAINERS AND COMMISSIONING METER

FlowCon Mini By-Pass Unit

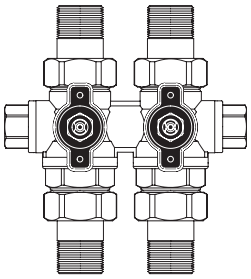

- 3 way mini By-Pass unit
- Forged brass housing
- Nickel plated brass ball valves
- Can be fitted with optional valve bodies supply/return side (A, AB, ABV, EVC or SM 15-40mm (1/2”-1 1/2”))
- Can be fitted with optional strainer and drain possibility on supply side.
- Can be fitted with optional inserts/cartridges on return side (Green, EVS, Composite, E-JUST or Stainless Steel)
- Can be fitted with a range of optional actuators on return side (depending on cartridge selection and valve body)
- Optional side option for drain, air vent or p/t plugs
- ISO Sizes: 4 x 20mm (3/4”) male fixed end for DN15 EuroCone
  Multiple union end connections available

FlowCon By-Pass Unit

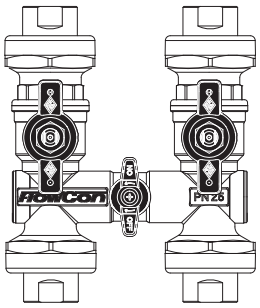

- 3 way By-Pass unit
- Forged brass housing
- Nickel plated brass ball valves
- Can be fitted with optional valve bodies supply/return side (A, AB, ABV, EVC or SM 15-40mm (1/2”-1 1/2”))
- Can be fitted with optional strainer and drain possibility on supply side.
- Can be fitted with optional inserts/cartridges on return side (Green, EVS, Composite, E-JUST or Stainless Steel)
- Can be fitted with a range of optional actuators on return side (depending on cartridge selection and valve body)
- ISO Sizes: 2 x 15mm (1/2”) male fixed end + 2 x union end conn.
  2 x 20mm (3/4”) male fixed end + 2 x union end conn.
  4 x union end conn. 15/20/25mm (1/2” / 3/4” / 1”)
- NPT Sizes: 4 x union end conn. 1/2” / 3/4” / 1”

FlowCon Strainer

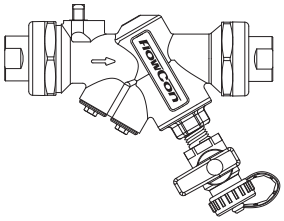

- Stainless steel strainer, mesh 60
- Optional pressure/temperature plugs (AB and ABS)
- Integral isolation ball valve (ABS)
- Range of union end connections available (ABS)
- Fixed female threaded ends (A and AB)
- Optional blow-down valve
- Sizes: 15-40mm (1/2”-1 1/2”)

FlowCon Commissioning Meter

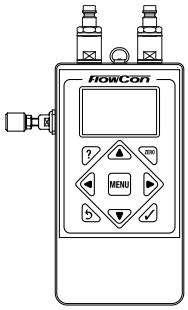

- Electronic manometer incl. data on all FlowCon valves
- Measurement range: 0.5-600 kPaD (0.07-87 psid)
- Range of accessories available incl. calculation software
- Selectable pressure units
- Selectable flow units

For other accessory options, please see *www.flowcon.com*

BUREAU VERITAS
Certification

Certification

Awarded to

FlowCon International A/S

Trafikcenter Allé 17, 4200 Slagelse, Denmark

Bureau Veritas Certification certify that the Management System of the above organisation has been audited and found to be in accordance with the requirements of the management system standards detailed below.

STANDARD

ISO 9001:2008

SCOPE OF SUPPLY

Development, sourcing, production, assembling, marketing and sales of Dynamic Flow and Temperature Control.

Original approval date: 29-01-2007

Subject to the continued satisfactory operation of the organisation's Management System, this certificate is valid until : 22-01-2013

To check the validity of this certificate please call: (+45) 77 311 000.
Further clarification regarding the scope of this certificate and the applicability of the system requirements may be obtained by consulting the organisation
Certificate Number: DNKFRC10000033A *Issue Date:* 05-01-2010

Managing office: Oldenborggade 1B, DK-7000 Fredericia
8|06 Certification office: Oldenborggade 1B, DK-7000 Fredericia

DANAK
SYSTEM Reg. 5025

FlowCon Green

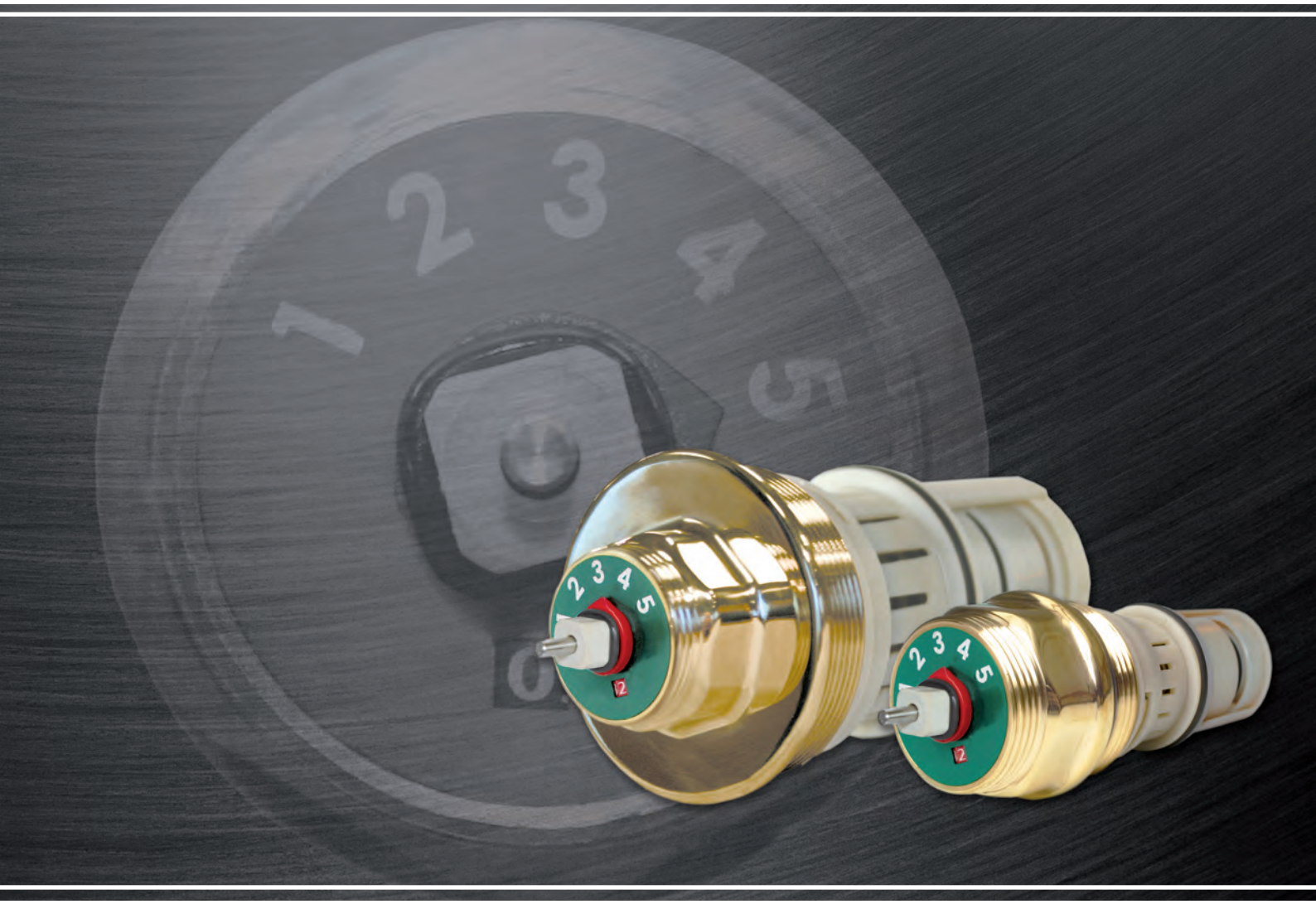

100% Authority
Pressure Independent Control Valves

FlowCon Green

Pressure Independent Control Valves

The FlowCon Green insert is designed as a 3-in-1 solution combining a full stroke modulation control valve, an automatic balancing valve and a differential pressure control valve. This new insert includes an innovative self-adjustment feature, which enables each valve continuously to self-balance. This ensures delivery of precisely the flow rate required by each terminal unit, independent of pressure fluctuations in the hydronic system. Each FlowCon Green insert can also be adjusted to set an accurate maximum flow rate limit to each circuit without stroke limitation.

The FlowCon Green insert can be used in several different applications within heating or cooling such as fan-coil units, air-handler units and other terminal units - wherever dynamic balancing and fully accurate temperature control are required, the FlowCon Green insert will be the ideal choice. It will be the easy solution to both designers, installers and end-users due to its user-friendly complete solution in one body and with one insert.

Valve Choice

The FlowCon Green insert can be used with the following FlowCon valves:
- *FlowCon A (DN15/20/25)*
- *FlowCon AB (DN15/20/25/32)*
- *FlowCon ABV1 (DN15/20/25)*
- *FlowCon ABV2 (DN25/32/40)*

100% Valve Authority

The FlowCon Green is a 100% authority pressure independent flow control valve which instantaneously self-balance at all points of operation, even when there is variance in pressure differential.

100% Authority Pressure Independent

As long as the pressure differential across the valve is within the operating range, the Kv of the valve is variable, being continuously regulated to keep the control valve in constant authority. The FlowCon Green insert will in other words always use full stroke of the spindle offering the 100% authority for any of its 41 maximum flow settings.

Features and Benefits

- **3-in-1 combi valve**, modulating control valve, dynamic flow limiter and differential pressure control valve in one body.
- **Differential pressure independent.**
- **Full stroke modulation** at any desing flow.
- **100% authority** for any of the insert's flow setting.
- **Automatic system balancing**, the correct flow rate for each circuit is achieved automatically.
- **Dynamic balancing**, the correct flow rate is maintained as each valve continuously compensates for pressure fluctuations in the system.
- **Field adjustable**, flow rate can be changed on demand without removing the insert from the valve body.
- **Elimination of branch or "partner" balancing valves** which results in fewer total valves used in each project.
- **Easily accessible insert** for flow rate adjustment or maintenance.
- **Accuracy:** Greatest of either ±10% of controlled flow rate or ±5% of maximum flow rate.
- **Up to 41 different flow curves** in one and the same insert.
- **Choice of actuator**, electrical actuators: 0(2)-10V modulating, 3-point floating or 2-position, or thermal actuators: 0-10V modulating or ON/OFF.
- **Built-in isolation ball valve** (FlowCon ABV).
- **Pressure/temperature measurement plugs** available for verifying operating differential pressure or checking ΔT across the coil (FlowCon AB / ABV).
- **Double union end connection** for ease of installation and wide selection of end fittings (FlowCon ABV) or **fixed end** female-by-female threaded (FlowCon A / AB).

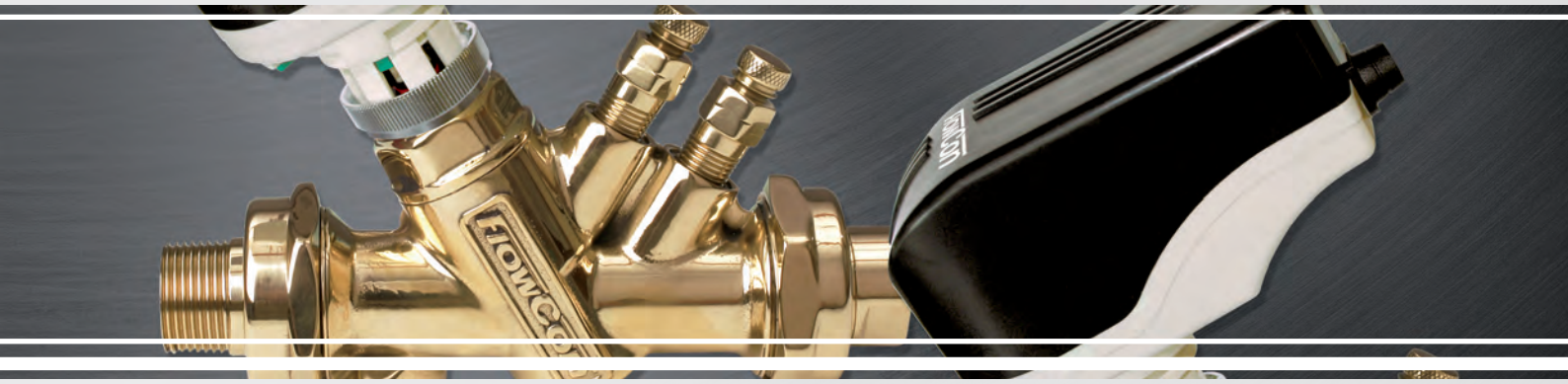

FlowCon Green										Setting
Insert: 20mm, 3/4”						Insert: 40mm , 1 1/2”				
Nominal flow rate	16-200 kPaD · 2.3-29 psid			30-400 kPaD · 4.4-58 psid			16-400 kPaD* · 2.3-58 psid*			
	Green.0 (green o-ring)			**Green.1** (black o-ring)			**Green.2** (black o-ring)			
	l/sec	l/hr	GPM	l/sec	l/hr	GPM	l/sec	l/hr	GPM	
	0.0089	32.0	0.141	0.0178	64	0.282	0.240	865	3.81	1.0
	0.0211	75.8	0.334	0.0393	142	0.624	0.282	1010	4.46	1.1
	0.0323	116	0.511	0.0580	209	0.920	0.322	1160	5.10	1.2
	0.0426	153	0.675	0.0743	268	1.180	0.361	1300	5.72	1.3
	0.0521	188	0.826	0.0887	319	1.41	0.399	1430	6.32	1.4
	0.0610	220	0.967	0.102	366	1.61	0.435	1570	6.90	1.5
	0.0693	250	1.10	0.113	408	1.80	0.471	1700	7.47	1.6
	0.0771	278	1.22	0.124	446	1.96	0.506	1820	8.02	1.7
	0.0844	304	1.34	0.134	482	2.12	0.540	1940	8.56	1.8
	0.0913	329	1.45	0.143	516	2.27	0.573	2060	9.08	1.9
	0.0978	352	1.55	0.152	549	2.42	0.605	2180	9.59	2.0
	0.104	374	1.65	0.161	580	2.56	0.636	2290	10.1	2.1
	0.110	396	1.74	0.170	611	2.69	0.667	2400	10.6	2.2
	0.115	416	1.83	0.178	641	2.82	0.696	2510	11.0	2.3
	0.121	435	1.92	0.186	671	2.95	0.725	2610	11.5	2.4
	0.126	453	2.00	0.194	700	3.08	0.753	2710	11.9	2.5
	0.131	471	2.07	0.202	728	3.21	0.780	2810	12.4	2.6
	0.136	488	2.15	0.210	756	3.33	0.807	2900	12.8	2.7
	0.140	504	2.22	0.218	783	3.45	0.832	3000	13.2	2.8
	0.144	520	2.29	0.225	810	3.56	0.858	3090	13.6	2.9
	0.149	535	2.35	0.232	835	3.68	0.882	3180	14.0	3.0
	0.153	549	2.42	0.239	860	3.79	0.906	3260	14.4	3.1
	0.156	563	2.48	0.245	883	3.89	0.930	3350	14.7	3.2
	0.160	577	2.54	0.252	906	3.99	0.953	3430	15.1	3.3
	0.164	590	2.60	0.257	927	4.08	0.975	3510	15.5	3.4
	0.167	602	2.65	0.263	946	4.17	0.997	3590	15.8	3.5
	0.171	614	2.70	0.268	965	4.25	1.02	3670	16.1	3.6
	0.174	626	2.76	0.273	982	4.32	1.04	3740	16.5	3.7
	0.177	637	2.81	0.277	998	4.39	1.06	3820	16.8	3.8
	0.180	649	2.86	0.281	1010	4.46	1.08	3890	17.1	3.9
	0.183	659	2.90	0.285	1020	4.51	1.10	3960	17.4	4.0
	0.186	670	2.95	0.288	1040	4.57	1.12	4030	17.7	4.1
	0.189	681	3.00	0.291	1050	4.61	1.14	4100	18.1	4.2
	0.192	691	3.04	0.294	1060	4.66	1.16	4170	18.4	4.3
	0.195	701	3.09	0.296	1070	4.70	1.18	4240	18.7	4.4
	0.197	711	3.13	0.299	1080	4.73	1.20	4300	19.0	4.5
	0.200	721	3.17	0.301	1080	4.77	1.21	4370	19.2	4.6
	0.203	730	3.22	0.303	1090	4.80	1.23	4440	19.5	4.7
	0.205	740	3.26	0.305	1100	4.83	1.25	4500	19.8	4.8
	0.208	749	3.30	0.307	1100	4.86	1.27	4570	20.1	4.9
	0.210	757	3.33	0.308	1110	4.89	1.29	4630	20.4	5.0

Accuracy: Greatest of either ±10% of controlled flow rate or ±5% of maximum flow rate.
*at setting 2.6.

Principle of Operation

On closer examination of the inner workings of the FlowCon Green, the function is best described as 2 valves in 1. The second valve (V2) regulates the pressure differential across the first valve (V1) by means of a rolling diaphragm element counteracted by a spring. The first valve is a calibrated variable orifice device adjusted by the actuator (similar to a standard modulating control valve).

The diaphragm reacts to the system and regulates the pressure differential across the actuated control valve orifice to maintain its flow rate.

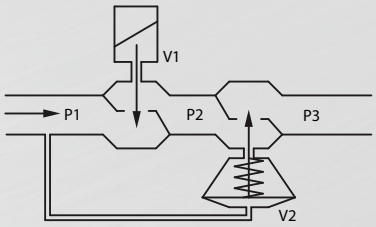

When pre-setting the maximum flow rate, the inlet orifice is changed in size sideways which does not interfere with the length of the stroke. When modulating, the orifice areas are affected by the actuator using the full stroke which results in the fact that the orifice area is changed in size in a vertical movement.

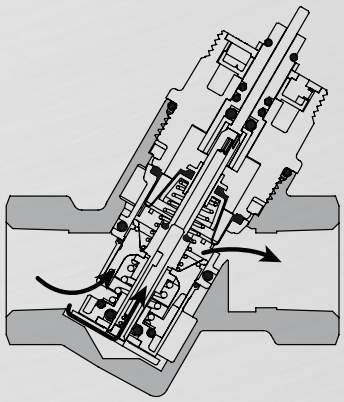

Hydronic Balance

The insert can be pre-set to limit the working range of the valve which limits the maximum flow rate through the valve. Consequently, hydronic balance is achieved automatically without the use of additional balancing valves.

Pre-setting the Maximum Flow Rate

The valve is adjusted to a maximum flow rate limit by setting the scale located on the top of the FlowCon Green insert. The setting indicates one of 41 possible maximum flow rates from e.g. 0.240-1.29 l/sec on FlowCon Green.2 but since the setting is stepless any flow rate in between will be obtainable. The setting is done by means of a special FlowCon key. With the actuator mounted, the pre-setting is “sealed” and the FlowCon Green insert eliminates any flow above the design flow.

For re-adjustment, simply disconnect power from the actuator and re-move the actuator from the insert. Then dial in the new required maximum flow and re-apply the actuator and connect power again.

Actuator Mounting and Self-Calibration

When using the actuator, always be sure that power supply is turned off and the actuator is in a fully open position (turn the actuator to this position if required) before fitting the actuator to the insert.

For further information please see the installation and operation instruction manual.

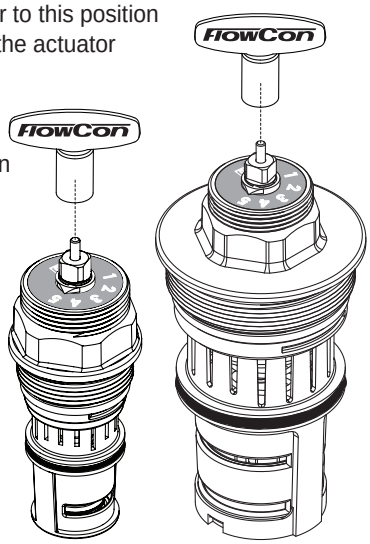

Technical Data

For further information and part number selection please see FlowCon tech note.
For latest updates please see ***www.flowcon.com.***

			A/AB/ABV DN15/20/25 with Green insert	AB DN25/32 with Green insert ABV DN25/32/40 with Green insert
Static Pressure		(kPa)	2500	2500
		(psi)	360	360
Temperature Rating (media / ambient)		(ºC)	-20 to +120 / 0 to +50	-20 to +120 / 0 to +50
		(ºF)	-4 to +248 / +32 to +122	-4 to +248 / +32 to +122
Pressure Drop Data			NOTE: For pump head calculations, add the minimum pressure differential for the index circuit to the other components pressure losses (i.e. valves, coil, etc.)	
Valve Body	(Kv-value)	(m^3/hr)	2.6	12.5
	(Cv-value)	(GPM)	3.0	14.5

FlowCon Green insert		**Green.0** (green o-ring)	**Green.1** (black o-ring)	**Green.2** (black o-ring)
Pressure Differential	(kPaD)	16-200	30-400	16-400 (at setting 2.6)
	(psid)	2.3-29	4.4-58	2.3-58 (at setting 2.6)
Flow Rate	(l/sec)	0.0089-0.210	0.0178-0.308	0.240-1.29
	(GPM)	0.141-3.33	0.282-4.89	3.81-20.4

FlowCon Green 15-40mm

Pressure Independent Control Valves

SPECIFICATIONS

Insert:

Static pressure:	2500 kPa / 360 psi
Ambient temperature:	+1ºC to +50ºC / +34ºF to +122ºF
Media temperature[1]:	-20ºC to +120ºC / -4ºF to +248ºF
Material:	
- Insert:	Glass-reinforced PSU/POM/PPS
- Diaphragm:	Green insert 20mm: EPDM
	Green insert 40mm: Hydrogenated acrylonitrile-butadiene-rubber
- Internal metal components:	Stainless steel
- O-rings:	EPDM
- Cone:	Green insert 20mm: PPS
	Green insert 40mm: PPS/EPDM
Maximum close off pressure:	Green insert 20mm: 600 kPaD / 87 psid
	Green insert 40mm: 400 kPaD / 58 psid
Maximum operational ΔP:	400 kPaD / 58 psid
Shut-off leakage:	ANSI / FCI 70-2 2006 / IEC 60534-4 - Class IV
Flow rate range:	Green insert 20mm: 0.0089-0.308 l/sec / 0.141-4.89 GPM
	Green insert 40mm: 0.240-1.29 l/sec / 3.81-20.4 GPM

Valve:

Material:	
- Body:	Forged brass ASTM CuZn40Pb2
- Ball valve:	ABV: Chemically nickel plated brass ball
End connections:	A: (only available for Green insert 20mm) Fixed female ISO or NPT
	AB: Fixed female ISO or NPT
	ABV: Union end connection in brass alloy ISO or NPT

Note 1: Stated temperature rating is defined due to no external insert condensation.

SPECIFICATIONS (continued)

FlowCon Actuators:

FlowCon Actuator[2]	FT.0.2[3]	FT.0.3[3]	FT.0.4[3]
Supply voltage	24V AC ±20%, 50/60Hz	230V AC ±15%, 50/60Hz	24V AC/DC ±20%, 50/60Hz
Type	Thermal	Thermal	Thermal
Power consumption	3VA	2.5VA	3VA
Control signal	Analog 0(2)-10V, Normally closed	ON/OFF, Normally closed	ON/OFF, Normally closed
Failsafe function	Yes		
Operation time[4]	App. 3.5 minutes		
Ambient temperature	0°C to +50°C		
Protection	IP54 including upside-down, class III		
Cable[5]	Plug-in, 1.0 meter		
Weight	0.18 kg		

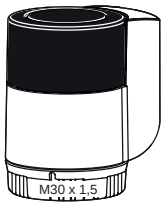

Type FT.0.2, FT.0.3 and FT.0.4

Note 2: FlowCon warranty is voided using other actuators than supplied or recommended by FlowCon International.
Note 3: Please note if mounted on FlowCon Green 25-40mm specified leakage rate to be exceeded.
Note 4: Closing time is approximately the double dependent on ambient temperature.
Note 5: The actuator is also available with a cable length of 2, 3, 4, 5, 6, 7, 10 and 15 meter.

FlowCon Actuator[6]	FN.0.2	FN.0.3	FN.0.4
Supply voltage	24V AC/DC ±10%, 50/60 Hz	110/230V AC ±10%, 50/60 Hz	24V AC/DC ±10%, 50/60 Hz
Motor	Bi-directional synchronous	Bi-directional synchronous	Bi-directional synchronous
Power consumption	5VA	5VA	5VA
Control signal	Analog 0(2)-10V DC	Digital (2-position / 3-point floating)	Digital (2-position / 3-point floating)
Feedback	Yes, 0(2)-10V DC	No	No
Failsafe function	No	No	No
Auto stroke	Yes	No	No
Operation time	50 Hz: 18.5 sec/mm	50 Hz: 18.5 sec/mm	50 Hz: 18.5 sec/mm
Actuation force	225N ±5%		
Ambient temperature	-18°C to +50°C		
Humidity rating	<95% no condensation		
Protection	IP54, class II		
Cable	4 wires 22 AWG halogen free cable, 1 meter	3 wires 22 AWG halogen free cable, 1 meter	3 wires 22 AWG halogen free cable, 1 meter
Weight	0.25 kg	0.25 kg	0.25 kg

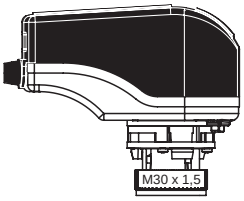

Type FN.0.X

Note 6: FlowCon warranty is voided using other actuators than supplied or recommended by FlowCon International.

FlowCon Actuator[7]	FN.1.2	FN.1.4
Supply voltage	24V AC/DC ±10%, 50/60 Hz	
Motor	Bi-directional synchronous	
Power consumption	6VA, 10VA peaks	
Control signal	Analog 0(2)-10V DC	Digital (2-position / 3-point floating)
Feedback	Yes, 0(2)-10V DC	No
Failsafe function	Yes	Yes
Auto stroke	Yes	No
Operation time	50 Hz: 19 sec/mm	50 Hz: 18.5 sec/mm
Actuation force	225N ±5%	
Ambient temperature	-18°C to +50°C	
Humidity rating	<95% no condensation	
Protection	IP54, class II	
Cable	4 wires 22 AWG halogen free cable, 1 meter	
Weight	0.30 kg	

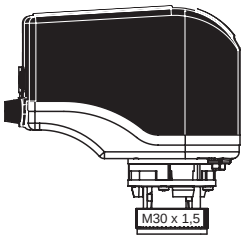

Type FN.1.X

Note 7: FlowCon warranty is voided using other actuators than supplied or recommended by FlowCon International.

DIMENSIONS AND WEIGHTS (NOMINAL) (measured in mm unless noted)

Model no.	Valve model	Valve size	Insert size	L	H1	H2 (FT.0.X act.)	H3 (FN.0.X act.)	H4 (FN.1.X act.)	End connections C[8]			Weight[9] (kgs.)	Kv[10] (m^3/hr)
									ISO female	ISO male	Sweat		
G.X.XX.04	A	15	20	80	31	115	130	145	n/a	n/a	n/a	0.58	2.6
G.X.XX.05		20										0.53	
G.X.XX.06		25		91								0.56	
G.X.XX.01	AB	15	20	82	31	115	130	145	n/a	n/a	n/a	0.51	2.6
G.X.XX.02		20		94								0.56	
G.X.XX.07		25		102								0.62	
G.2.XX.14		25	40	128	47	131	153	165	n/a	n/a	n/a	1.85	12.5
G.2.XX.15		32										1.69	
G.X.XX.03	ABV1	15	20	122	33	115	130	145	22	25	20	0.85	2.6
		20							22	25	20		
		25							n/a	39	22		
G.2.XX.17	ABV2	25	40	168	42	131	153	165	35	40	34	2.15	12.5
		32							33	40	37		
		40							33	42	n/a		

Note 8: Add end connection length to body length.
Note 9: Weight does not include end connections or actuator.
Note 10: For valve body.

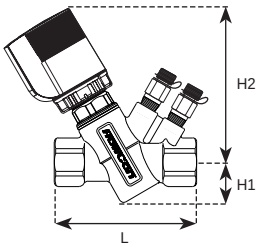

Valve model: AB DN15/20/25 with FT actuator

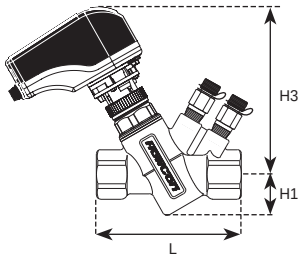

Valve model: AB DN15/20/25 with FN.0.X actuator

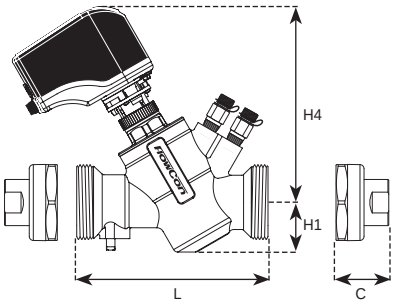

Valve model: ABV DN25/32/40 with FN.1.X actuator

MODEL NUMBER SELECTION

G . ____ . ____ ____ . ____ ____ . ____ . ____ . ____ . ____

Insert flow range:
0=20mm insert low flow
1=20mm insert medium flow
2=40mm insert

Insert type of actuator:
22=FT.0.2 23=FT.0.3 24=FT.0.4
32=FN.0.2 33=FN.0.3 34=FN.0.4 42=FN.1.2 44=FN.1.4

Insert type of body:
20mm insert: 01=AB15 02=AB20 03=ABV1 04=A15 05=A20 06=A25 07=AB25
40mm insert: 14=AB25 15=AB32 17=ABV2

Insert p/t plug requirements:
B=pressure/temperature plugs P=taps plugged - leave blank if A-body or no p/t plugs required

Insert inlet x outlet union end connections: - leave blank if A- or AB-body or no end connections required

Body model and size	Female threaded	Male treaded	Sweat
G.0.XX.03, 15-25mm, 1/2”-1” G.1.XX.03, 15-25mm, 1/2”-1”	E = 15mm=1/2” F = 20mm=3/4”	H = 15mm=1/2” I = 20mm=3/4” J = 25mm=1”	K = 15mm L = 18mm M = 22mm
G.2.XX.17, 25-40mm, 1”-1 1/2”	G = 25mm=1” P = 32mm=1 1/4” Q = 40mm=1 1/2”	J = 25mm=1” S = 32mm=1 1/4” T = 40mm=1 1/2”	N = 28mm W = 35mm

Insert connections standard:
I=ISO N=NPT (NPT: not available on A25 and AB25 for 20mm insert)

Example: G.1.22.03.B.F.F.I=20mm FlowCon Green, medium flow, with an ABV1-body with p/t plugs and a 24V thermal modulating actuator and 20mm ISO female union end connections.

WIRING INSTRUCTION

Type FT.0.2

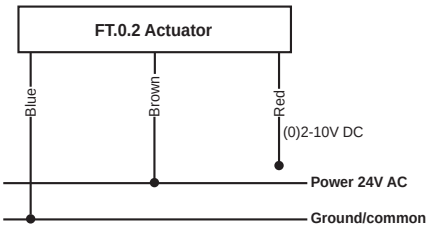

Type FT.0.3 and FT.0.4

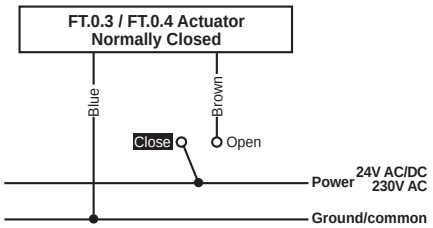

Type FN.0.2 and FN.1.2

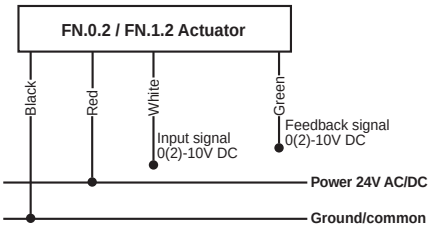

Type FN.0.3

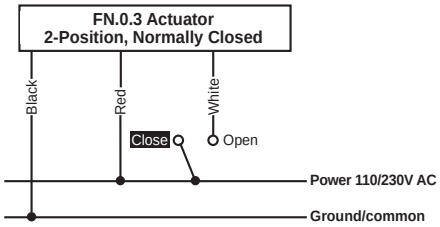

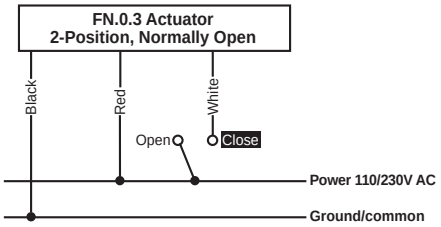

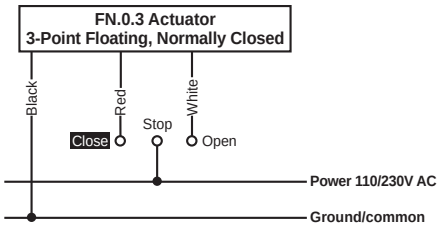

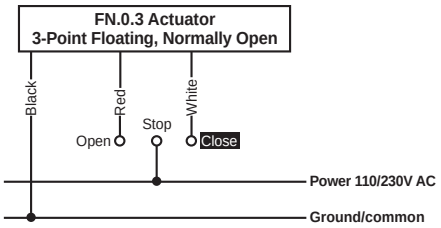

Type FN.0.4

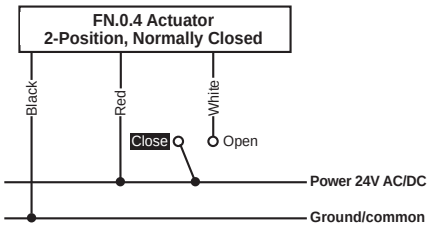

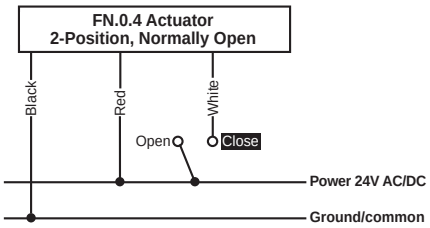

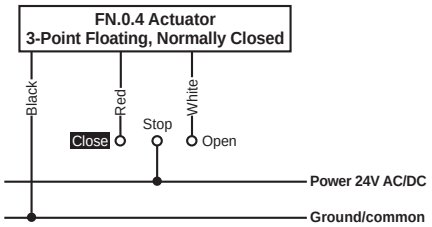

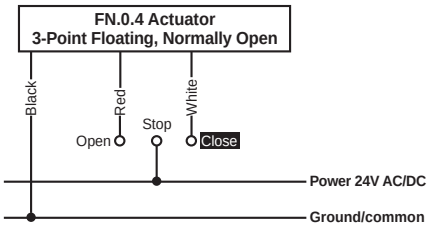

WIRING INSTRUCTION (...continued)

Type FN.1.4

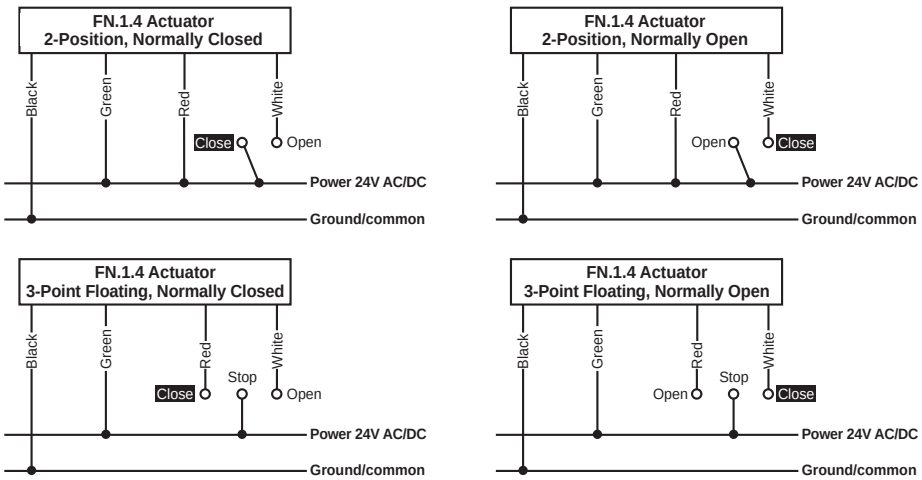

DESCRIPTION

The FlowCon Green serie is pressure independent control valves that are pressure independent, two-way, modulating to accept digital or analog input signals. The valves accept 0(2)-10V, 3-point floating or ON/OFF input signals. Each valve has an adjustable maximum flow rate setting maintaining a full stroke to enable flow limitation and balancing to the coil or zone that the valve is controlling.

For use in fan-coil units, VAV applications and cooling ceilings for activation of the heating or cooling.
They are available in three different valve bodies, i.e. FlowCon A, AB or ABV.

MAXIMUM FLOW RATE LIMITATION SETTINGS - VALVE SIZE DN15-DN40

FlowCon Green									Setting
Insert size: 20mm · 3/4”						Insert size: 40mm · 1 1/2”			
16-200 kPad · 2.3-29 psid			30-400 kPad · 4.4-58 psid			16-400 kPad · 2.3-58 psid (at setting: 2.6)			
Green.0 (green o-ring)			**Green.1** (black o-ring)			**Green.2** (black o-ring)			
l/sec	l/hr	GPM	l/sec	l/hr	GPM	l/sec	l/hr	GPM	
0.0089	32.0	0.141	0.0178	64	0.282	0.240	865	3.81	1.0
0.0211	75.8	0.334	0.0393	142	0.624	0.282	1010	4.46	1.1
0.0323	116	0.511	0.0580	209	0.920	0.322	1160	5.10	1.2
0.0426	153	0.675	0.0743	268	1.180	0.361	1300	5.72	1.3
0.0521	188	0.826	0.0887	319	1.41	0.399	1430	6.32	1.4
0.0610	220	0.967	0.102	366	1.61	0.435	1570	6.90	1.5
0.0693	250	1.10	0.113	408	1.80	0.471	1700	7.47	1.6
0.0771	278	1.22	0.124	446	1.96	0.506	1820	8.02	1.7
0.0844	304	1.34	0.134	482	2.12	0.540	1940	8.56	1.8
0.0913	329	1.45	0.143	516	2.27	0.573	2060	9.08	1.9
0.0978	352	1.55	0.152	549	2.42	0.605	2180	9.59	2.0
0.104	374	1.65	0.161	580	2.56	0.636	2290	10.1	2.1
0.110	396	1.74	0.170	611	2.69	0.667	2400	10.6	2.2
0.115	416	1.83	0.178	641	2.82	0.696	2510	11.0	2.3
0.121	435	1.92	0.186	671	2.95	0.725	2610	11.5	2.4
0.126	453	2.00	0.194	700	3.08	0.753	2710	11.9	2.5
0.131	471	2.07	0.202	728	3.21	0.780	2810	12.4	2.6
0.136	488	2.15	0.210	756	3.33	0.807	2900	12.8	2.7
0.140	504	2.22	0.218	783	3.45	0.832	3000	13.2	2.8
0.144	520	2.29	0.225	810	3.56	0.858	3090	13.6	2.9
0.149	535	2.35	0.232	835	3.68	0.882	3180	14.0	3.0
0.153	549	2.42	0.239	860	3.79	0.906	3260	14.4	3.1
0.156	563	2.48	0.245	883	3.89	0.930	3350	14.7	3.2
0.160	577	2.54	0.252	906	3.99	0.953	3430	15.1	3.3
0.164	590	2.60	0.257	927	4.08	0.975	3510	15.5	3.4
0.167	602	2.65	0.263	946	4.17	0.997	3590	15.8	3.5
0.171	614	2.70	0.268	965	4.25	1.02	3670	16.1	3.6
0.174	626	2.76	0.273	982	4.32	1.04	3740	16.5	3.7
0.177	637	2.81	0.277	998	4.39	1.06	3820	16.8	3.8
0.180	649	2.86	0.281	1010	4.46	1.08	3890	17.1	3.9
0.183	659	2.90	0.285	1020	4.51	1.10	3960	17.4	4.0
0.186	670	2.95	0.288	1040	4.57	1.12	4030	17.7	4.1
0.189	681	3.00	0.291	1050	4.61	1.14	4100	18.1	4.2
0.192	691	3.04	0.294	1060	4.66	1.16	4170	18.4	4.3
0.195	701	3.09	0.296	1070	4.70	1.18	4240	18.7	4.4
0.197	711	3.13	0.299	1080	4.73	1.20	4300	19.0	4.5
0.200	721	3.17	0.301	1080	4.77	1.21	4370	19.2	4.6
0.203	730	3.22	0.303	1090	4.80	1.23	4440	19.5	4.7
0.205	740	3.26	0.305	1100	4.83	1.25	4500	19.8	4.8
0.208	749	3.30	0.307	1100	4.86	1.27	4570	20.1	4.9
0.210	757	3.33	0.308	1110	4.89	1.29	4630	20.4	5.0

Nominal flow rate

Accuracy: Greatest of either ±10% of controlled flow rate or ±5% of maximum flow rate.

A micrometer setting of 3.4 as illustrated beside corresponds to a maximum flow rate of

0.164 l/sec (Green.0),
0.257 l/sec (Green.1),
0.975 l/sec (Green.2).

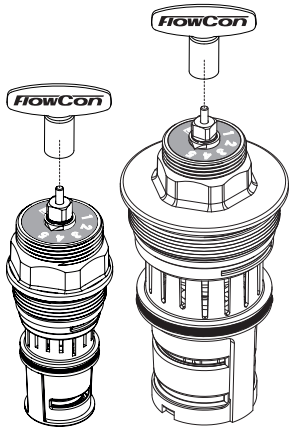

Use the special designed key (FlowCon part no. ACC0001) for micrometer setting.

GENERAL SPECIFICATIONS

1. PRESSURE INDEPENDENT DYNAMIC CONTROL VALVE FLOWCON GREEN

1.1. Contractor shall install the pressure independent dynamic control valves where indicated in drawings.
1.2. Valve shall be an electronic, dynamic, modulating, 2-way, pressure independent control device.
1.3. Pressure independent dynamic control valve shall accurately control flow, independent of system pressure fluctuation.
1.4. Maximum flow setting shall be adjustable to 41 different settings within the range of the valve size.

2. VALVE ACTUATOR

2.a. **FlowCon FT-actuators**

2.a.1 Valve actuator housing shall be rated to IP54, including up-side-down mounting.
2.a.2 Actuator shall be driven by 24V or 230V AC, and shall depending on actuator choice accept 0(2)-10V DC or ON/OFF control signal.
2.a.3 Actuator shall use full stroke and provide full authority.
2.a.4 Actuator shall have visible indication of stroke position.
2.a.5 Failsafe function shall be available on all version.

OR....

2.b. **FlowCon FN-actuators**

2.b.1 Valve actuator housing shall be rated to IP54.
2.b.2 Actuator shall be driven by 24V AC/DC or 110V/230V AC, and shall depending on actuator choice accept 0(2)-10V DC, 3-point floating or 2-position control signal.
2.b.3 Actuator shall use full stroke and provide full authority.
2.b.4 Actuator shall have visible indication of stroke position.
2.b.5 Feedback signal 0(2)-10V DC to the control system shall be standard on modulating version.
2.b.6 Optional failsafe function shall be available on 24V AC/DC versions.
2.b.7 Optional auto stroke function shall be available on modulating version.
2.b.8 Manual override shall be possible without use of tools.

3. VALVE HOUSING

3.a. **FlowCon A**

3.a.1 Valve housing shall consist of forged brass ASTM CuZn40Pb2, rated at no less than 2500 kPa static pressure at +120ºC.

OR….

3.b. **FlowCon AB**

3.b.1 Valve housing shall consist of forged brass ASTM CuZn40Pb2, rated at no less than 2500 kPa static pressure at +120ºC.
3.b.2 Pressure/temperature test plugs for verifying accuracy of flow performance shall be available for all valve sizes.

OR….

3.c. **FlowCon ABV**

3.c.1 Valve housing shall consist of forged brass ASTM CuZn40Pb2, rated at no less than 2500 kPa static pressure at +120ºC.
3.c.2 Valve ball shall consist of chemically nickel plated brass (ASTM CuZn40Pb2).
3.c.3 Pressure/temperature test plugs for verifying accuracy of flow performance shall be available for all valve sizes.

4. FLOW REGULATION UNIT

4.1. Flow regulation unit shall consist of glass-reinforced PSU/POM/PPS with an EPDM diaphragm (20mm insert) or a hydrogenated acrylonitrile-butadiene-rubber diaphragm (40mm insert).
4.2. Flow regulation unit shall be readily accessible, for change-out or maintenance.
Flow regulation unit shall be adjustable with the valve in-line and the system in operation.
4.3. Flow regulation unit shall be externally adjustable to 1 of 41 different flow rates without limiting the stroke length; shall be available in 2 different kPaD operational ranges for DN15/20/25 and 1 kPaD operational ranges for DN25/32/40; minimum range shall be capable of being activated by minimum 16 kPaD. Further, the flow regulation unit shall be capable of controlling the flow within ±10% of rated flow or ±5% of maximum flow.

APPLICATION AND SCHEMATIC EXAMPLE

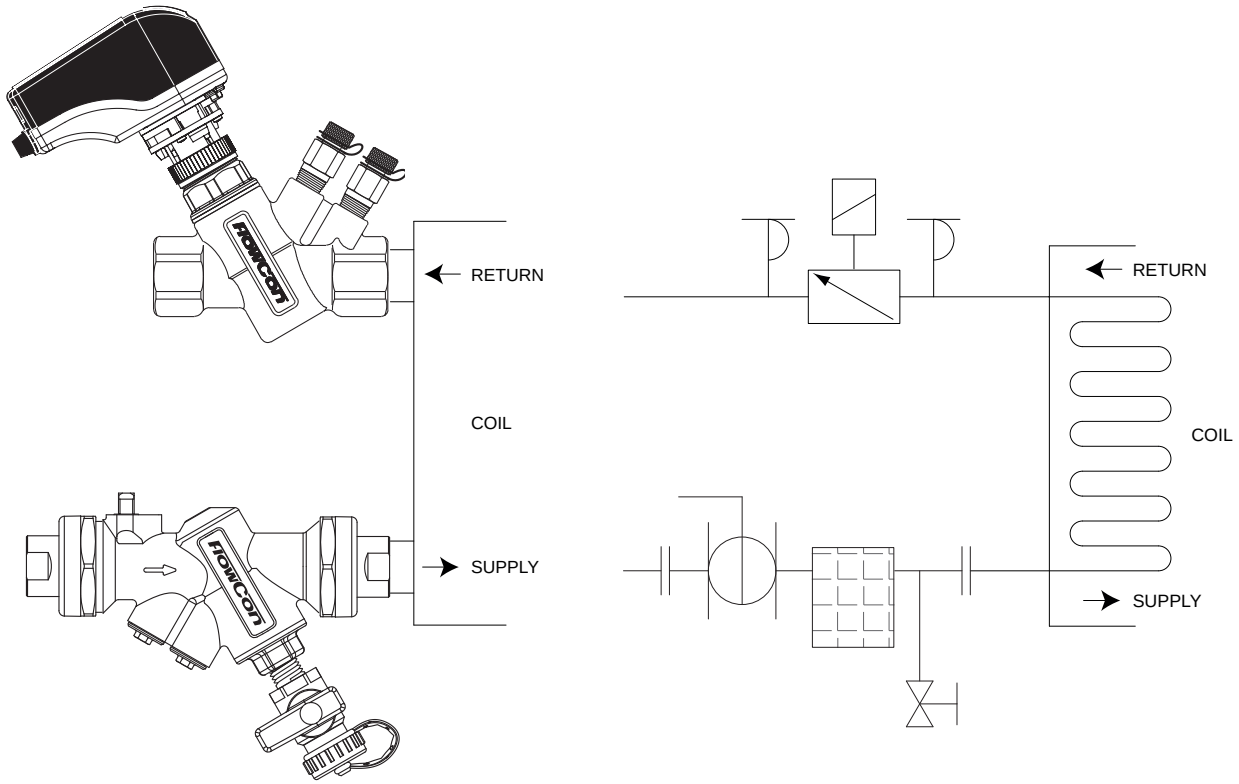

UPDATES

For latest updates please see www.flowcon.com

FlowCon International

FlowCon SM

The World's most Advanced Control Valves

Now with New State-of-the-Art User Friendly Actuator

FlowCon SM

Dynamic Temperature Control Valve

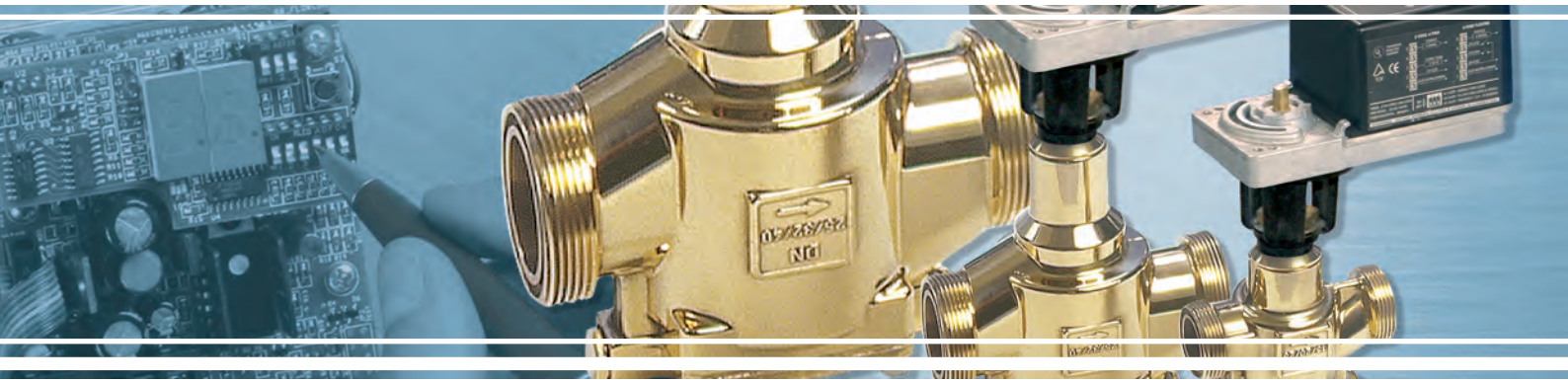

A common problem in hydronic systems is choosing the proper control valve while considering the requirements of acceptable authority. Along with this are the problems of determining the characteristics of the circuit necessary to assess the authority of the control valve.

Unstable and inaccurate regulation is often the consequence of over/under sizing a control valve. This is due to the fact that it is impossible to select a traditional control valve with a coefficient which optimally fits the given design parameters. Often the problem is exaggerated by pressure drop fluctuations across the control valve, which occur at varying loads in the system.

The FlowCon SM valve is a dynamic control valve which means the valve automatically keeps a constant differential pressure across the internal controlling orifice of the valve. Consequently, pressure drop fluctuations across the FlowCon SM will not affect the set flow through the valve. FlowCon SM can be set to limit the maximum design flow, which makes over-sizing control valves obsolete. Extensive calculations and assessments of the authority of the selected valve are eliminated. The dynamic flow characteristics keep the FlowCon SM in constant authority and automatically balanced, eliminating the requirement for a separate balancing valve in the circuit.

FlowCon SM dynamic temperature control valves are designed as an automatic temperature control for coils and AHUs; as a two-way regulation valve in HVAC installation such as radiator heating circuit or inventing heat systems; as a control valve for heat exchangers in heating systems to control floor heating circuits or other secondary heating circuits and as a control valve in hot water tank systems.

It is designed to control the rate of fluid flow to a specific terminal unit or coil. The FlowCon SM includes an innovative self adjustment feature which enables each valve continuously to self balance. This ensures delivery of precisely the flow rate required by each terminal unit, independent of pressure fluctuations in the hydronic system. Each FlowCon SM can also be adjusted to set an accurate maximum flow rate limit to each circuit.

Features and Benefits

- **Pressure independent flow control.**
- **Total valve authority.**
- **User friendly** touch panel on actuator for selection of flow, control input etc. (optional on SM DN15-40).
- **Save time and labor;** installation and adjustment of balancing valves are eliminated.
- **Kv sizing calculations and problems are eliminated;** each valve is adjustable to 51 different maximum flow rate settings.
- **Feedback signal** provides information of current valve position, which can be converted into flow rate.
- **Optional failsafe power storage feature** which opens or closes the valve in case external power supply fails.
- **Continuously displaying** flow rate - and scrolling other actuator information (optional on SM DN15-40).
- **Actuator** is suitable for electrical modulating, 3-point-floating or 2 position signals.
- **Pressure/temperature measurement plugs** for verifying operating pressure differential range or checking ΔT across the coil.
- **Double union end or flange connection** for ease of installation.

Principle of Operation

On closer examination of the inner workings of the FlowCon SM, the function is best described as 2 valves in 1. The first valve (V1) regulates the pressure differential across the second valve (V2) by means of a rolling diaphragm counteracted by a spring. The second valve is a calibrated variable orifice device adjusted by the actuator (similar to a standard modulating control valve). The diaphragm reacts to the system and regulates the pressure differential across the actuated control valve orifice to maintain its flow rate.

System Layout Comparison and Valve Authority

The FlowCon SM is a 100% authority pressure independent flow control valve which instantaneously self-balance at all points of operation, even when there is variance in pressure differential. As long as the pressure differential across the valve is within the operating range, the Kv of the valve is variable, being continuously regulated to keep the control valve in constant authority.

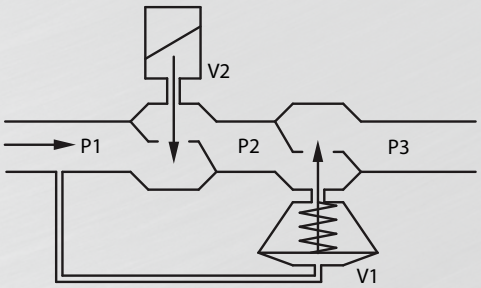

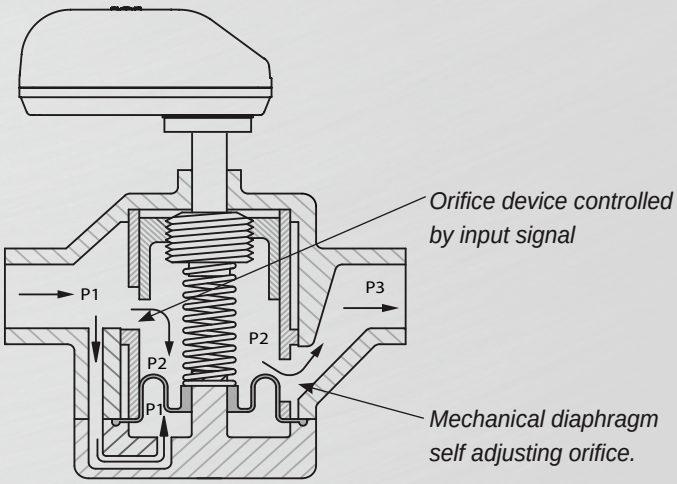

Hydronic Balance

The actuator can be pre-set to limit the working range of the valve which limits the maximum flow rate through the valve. Consequently, hydronic balance is achieved automatically without the use of additional balancing valves.

User friendly programmable actuator

All SM-valves can be fitted with the new state-of-the-art actuators which both in design and user-friendliness are unique. On the touch panel on the actuator all features are selected. It is possible to select 51 different flow rate maximums per valve. Both control input signal and feedback signal are also selected on the touch panel. Input signal can be modulating, 3-point-floating or 2 position and feedback signal can be “automatic”, 0(2)-10V or 4-20mA. The control signals i.e. input signals and feedback automatically adapt to the pre-set working range of the valve. This means that maximum signal is equal to the maximum pre-set design flow limit. The digital control system is allowed to work throughout the full range of the signal independent of the working range. Further, the valve can be selected to operate either in NC-mode (normally closed) so that the valve opens with an increasing signal or in NO-mode (normally open) so that it closes with an increasing signal.

Failsafe

The failsafe option will move the valve to safety position (standard is failsafe closed) during power failure utilized by a rechargeable battery.

Technical Data

For further information and part number selection please see FlowCon tech note.
For latest updates please see ***www.flowcon.com.***

			SM1 DN15/20/25	SM2 DN25/32/40	SM3 DN50/65/80			SM4 DN80/100			SM5 DN125/150	
Pressure Differential		(kPaD)	33-320	40-320	35-400	35-400	80-400	35-400	60-400	60-400	35-400	60-400
		(psid)	4.6-46	5.8-46	5.1-58	5.1-58	11.6-58	5.1-58	8.7-58	8.7-58	5.1-58	8.7-58
Flow Rate		(l/sec)	0.176-0.685	0.513-2.34	1.48-4.16	2.57-7.15	3.55-9.88	3.49-9.38	4.73-14.2	3.68-20.2	6.48-23.3	7.10-29.5
		(GPM)	2.79-10.9	8.14-37.1	23.4-66.0	40.7-113	56.3-157	55.4-149	75.0-225	58.3-320	103-369	113-468
Static Pressure		(kPa)	2500		4000							
		(psi)	360		580							
Temperature Rating (media/ambient)		(ºC)	-20 to +120 / -10 to +54									
		(ºF)	-4 to +248 / +14 to +131									
Pressure Drop Data			NOTE: For pump head calculations, add the minimum pressure differential for the index circuit to the other components pressure losses (i.e. valves, coil, etc.)									
Valve	(Kv-value)	(m^3/hr)	4.1	12.6	24.0	39.5	39.5	58.3	58.3	89.0	132.3	132.3
	(Cv-value)	(GPM)	4.8	14.6	27.8	45.8	45.8	67.6	67.6	103.2	153.5	153.5

FlowCon SM 15-40mm

Dynamic Self Balancing Control Valve

SPECIFICATIONS

Pressure rating:	2500 kPa / 360 psi
Temperature rating, media:	-20°C to +120°C / -4°F to +248°F
Temperature rating, ambient:	-10°C to +50°C / +14°F to +122°F
Material:	
- Diaphragm:	Hydrogenated acrylonitrile-butadiene-rubber
- Body:	Forged brass ASTM CuZn40Pb2
- Union end connections:	Brass alloy ISO or NPT
- O-rings:	EPDM
- Internal metal components:	Stainless steel
Body tappings :	1/4” NPT
Maximum close off pressure:	600 kPa / 87 psi
Maximum operational ΔP:	320 kPaD / 46 psid
Flow rate range:	0.176-2.34 l/sec / 2.78-37.1 GPM

DIMENSIONS AND WEIGHTS (NOMINAL) (measured in mm unless noted)

Model no.	Valve size	L	H1 with actuator SM.0.0.0.1	H2	H3 with actuator SM.0.0.0.3/4/5/6	End connections C[1]			Weight[2] (kgs.) with actuator SM.0.0.0.1 (w/o end conn.)	Weight[2] (kgs.) with actuator SM.0.0.0.3/4/5/6 (w/o end conn.)
						ISO Female	ISO Male	Sweat		
SM.1.1	15	108	182	59	185	22	25	20	2.6	2,9
	20					22	25	20		
	25					N/A	39	22		
SM.2.1	25	149	232	63	235	35	40	34	4.3	4.6
	32					33	40	37		
	40					33	42	N/A		

Note 1: Add end connection length to body length.
Note 2: Weight includes valve and actuators.

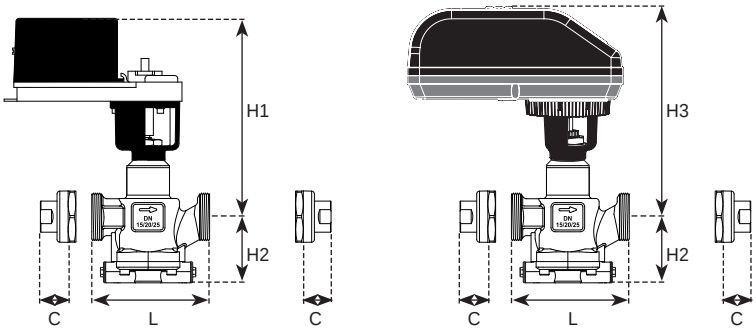

FLOW RATE TABLE

Model no.	Valve size		Control range		Minimum setting			Maximum setting			Shut-off leakage
	mm	inch	kPaD	psid	l/sec	l/hr	GPM	l/sec	l/hr	GPM	
SM.1.1	15	1/2”	32-320	4.6-46	0.176	634	2.78	0.685	2470	10.9	Leakage<0.05% of Kvs Kvs=4.1 m³/hr
	20	3/4”									
	25	1”									
SM.2.1	25	1”	40-320	5.8-46	0.513	1850	8.13	2.34	8420	37.1	Leakage<0.05% of Kvs Kvs=12.6 m³/hr
	32	1 1/4”									
	40	1 1/2”									

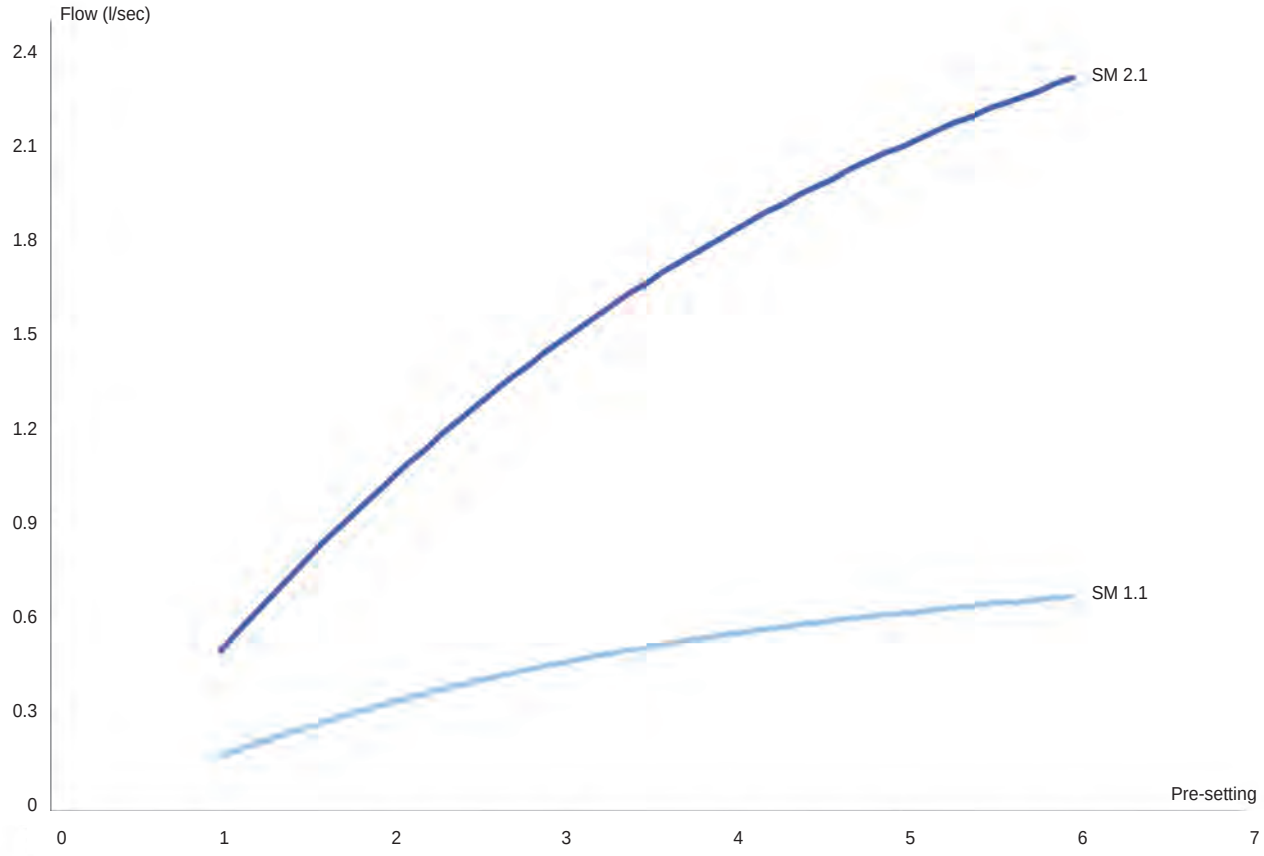

MODEL NUMBER SELECTION

SM . ____ . __1__ . ____ . ____ . ____ . ____ . ____

Insert body size:
1=15-25mm, 1/2”-1” 2=25-40mm, 1”-1 1/2”

Insert dP control range:
1=standard

Insert p/t plug requirements:
B=pressure/temperature plugs P=taps plugged (standard)

Insert actuator selection:
1=brush/basic (standard, SM.0.0.0.1) 3=display (SM.0.0.0.3) 4=display and failsafe (SM.0.0.0.4)
5=display and BACnet (SM.0.0.0.5) 6=display, BACnet and failsafe (SM.0.0.0.6)

Insert inlet x outlet union end connections:

Body size	Female threaded	Male treaded	Sweat
15-25mm, 1/2”-1”	E=15mm=1/2” F=20mm=3/4”	H=15mm=1/2” I=20mm=3/4” J=25mm=1”	K=15mm L=18mm M=22mm
25-40mm, 1”-1 1/2”	G=25mm=1” P=32mm=1 1/4” Q=40mm=1 1/2”	J=25mm=1” S=32mm=1 1/4” T=40mm=1 1/2”	N=28mm W=35mm

Insert connections standard:
I=ISO N=NPT

Example: SM.2.1.B.1.Q.Q.I=SM 25-40mm body with p/t plugs, standard brush basic actuator and 40mm ISO female threaded end connections.

ACTUATOR SPECIFICATIONS[3]

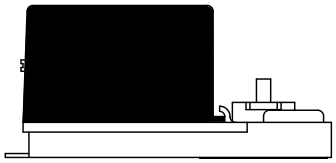

FlowCon SM.0.0.0.1 actuator

Supply voltage:	24V AC or 30V DC
Power consumption:	20VA @ 26V AC
Frequency:	50/60 HZ
Control input:	2-10V DC, 4-20mA or 3-point floating
Feedback position output:	2-10V DC or 4-20mA
Turn time:	150 seconds (from closed to fully open valve)
Electrical connection:	15mm grommet connection
Direction of rotation:	Bi-directional
Humidity rating:	Fully coated electronic board
Housing material:	Aluminium
Housing insulation:	IP42

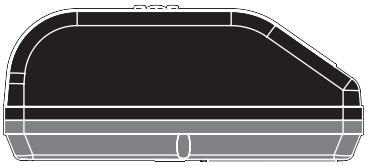

FlowCon SM.0.0.0.3, SM.0.0.0.4, SM.0.0.0.5 (with BACnet) and SM.0.0.0.6 (with BACnet and failsafe) actuators

Supply voltage:	24V AC/DC
Power consumption:	12VA
Frequency:	50/60 HZ
Control input:	0-10V DC, 2-10V DC, 0-20mA, 4-20mA, 2-position or 3-point floating
Feedback position output:	Automatic match of control input, 0-10V DC, 2-10V DC or 4-20mA
Turn time:	190 seconds (from closed to fully open valve)
Electrical connection:	5 wires 22 AWG halogen free cable, 1 meter For BACnet versions another 3 wires 22 AWG halogen free cable, 1 meter
Direction of rotation:	Bi-directional
Humidity rating:	5 to 95% RH non condensing
Housing material:	UL94 V0-rated plastic
Housing insulation:	IP54 including up-side-down mounting
Programming:	External programming of all settings, interface of buttons and display
Calibration:	Automatic calibration at startup
Valve - actuator coupling:	Easy snap coupling
BACnet device profile:	BACnet Application Specific Controller (B-ASC) type server
BACnet protocol:	BACnet Master Slave/Token passing (MS/TP)
BACnet baud rates supported:	9600, 19200, 38400 and 76800
BACnet services (BIBBS) supported:	DS-RP-B, DS-WP-B, DM-DDB-B, DM-DOB-B and DM-DCC-B.

Note 3: FlowCon warranty is voided using other actuators than supplied or recommended by FlowCon International A/S.

FLOW RATE SETTING - VALVE SIZE DN15-DN40

Maximum Flow Rate					
DN15-DN25 · 1/2”-1”			DN25-DN40 · 1”-1 1/2”		
32-320 kPaD · 4.6-46 psid			40-320 kPaD · 5.8-46 psid		
SM.1.1			**SM.2.1**		
l/sec	l/hr	GPM	l/sec	l/hr	GPM
0.176	633	2.78	0.513	1850	8.13
0.195	702	3.09	0.573	2060	9.08
0.214	770	3.39	0.632	2280	10.0
0.233	838	3.69	0.690	2480	10.9
0.251	902	3.97	0.746	2690	11.8
0.268	964	4.24	0.802	2890	12.7
0.285	1030	4.51	0.856	3080	13.6
0.301	1080	4.77	0.909	3270	14.4
0.317	1140	5.02	0.961	3460	15.2
0.332	1200	5.26	1.01	3640	16.0
0.347	1250	5.50	1.06	3820	16.8
0.362	1300	5.73	1.11	4000	17.6
0.376	1350	5.96	1.16	4170	18.3
0.390	1400	6.18	1.20	4330	19.1
0.403	1450	6.38	1.25	4500	19.8
0.416	1500	6.59	1.29	4660	20.5
0.428	1540	6.78	1.34	4810	21.2
0.440	1580	6.97	1.38	4970	21.9
0.452	1630	7.16	1.42	5120	22.5
0.463	1670	7.33	1.46	5260	23.2
0.474	1710	7.51	1.50	5400	23.8
0.485	1750	7.68	1.54	5540	24.4
0.495	1780	7.84	1.58	5680	25.0
0.505	1820	8.00	1.61	5810	25.6
0.515	1850	8.16	1.65	5940	26.2
0.524	1890	8.30	1.69	6070	26.7
0.533	1920	8.44	1.72	6190	27.3
0.542	1950	8.59	1.75	6310	27.8
0.550	1980	8.71	1.79	6430	28.3
0.559	2010	8.86	1.82	6550	28.8
0.567	2040	8.98	1.85	6660	29.3
0.574	2070	9.09	1.88	6770	29.8
0.582	2100	9.22	1.91	6870	30.3
0.589	2120	9.33	1.94	6980	30.7
0.596	2150	9.44	1.97	7080	31.2
0.603	2170	9.55	1.99	7180	31.6
0.609	2190	9.66	2.02	7280	32.0
0.616	2220	9.76	2.05	7370	32.5
0.622	2240	9.85	2.07	7460	32.9
0.628	2260	9.95	2.10	7550	33.3
0.634	2280	10.1	2.12	7640	33.6
0.639	2300	10.1	2.15	7730	34.0
0.645	2320	10.2	2.17	7810	34.4
0.650	2340	10.3	2.19	7890	34.8
0.655	2360	10.4	2.22	7970	35.1
0.661	2380	10.5	2.24	8050	35.5
0.667	2400	10.6	2.26	8130	35.8
0.671	2420	10.6	2.28	8200	36.1
0.676	2430	10.7	2.30	8280	36.4
0.680	2450	10.8	2.32	8350	36.8
0.685	2470	10.9	2.34	8420	37.1

Maximum Flow Rate DIP Switch Settings						Stem Rotations From Closed
Used on SM.0.0.0.1						
1	2	3	4	5	6	Rotations
ON	ON	ON	ON	ON	ON	1.0
OFF	ON	ON	ON	ON	ON	1.1
ON	OFF	ON	ON	ON	ON	1.2
OFF	OFF	ON	ON	ON	ON	1.3
ON	ON	OFF	ON	ON	ON	1.4
OFF	ON	OFF	ON	ON	ON	1.5
ON	OFF	OFF	ON	ON	ON	1.6
OFF	OFF	OFF	ON	ON	ON	1.7
ON	ON	ON	OFF	ON	ON	1.8
OFF	ON	ON	OFF	ON	ON	1.9
ON	OFF	ON	OFF	ON	ON	2.0
OFF	OFF	ON	OFF	ON	ON	2.1
ON	ON	OFF	OFF	ON	ON	2.2
OFF	ON	OFF	OFF	ON	ON	2.3
ON	OFF	OFF	OFF	ON	ON	2.4
OFF	OFF	OFF	OFF	ON	ON	2.5
ON	ON	ON	ON	OFF	ON	2.6
OFF	ON	ON	ON	OFF	ON	2.7
ON	OFF	ON	ON	OFF	ON	2.8
OFF	OFF	ON	ON	OFF	ON	2.9
ON	ON	OFF	ON	OFF	ON	3.0
OFF	ON	OFF	ON	OFF	ON	3.1
ON	OFF	OFF	ON	OFF	ON	3.2
OFF	OFF	OFF	ON	OFF	ON	3.3
ON	ON	ON	OFF	OFF	ON	3.4
OFF	ON	ON	OFF	OFF	ON	3.5
ON	OFF	ON	OFF	OFF	ON	3.6
OFF	OFF	ON	OFF	OFF	ON	3.7
ON	ON	OFF	OFF	OFF	ON	3.8
OFF	ON	OFF	OFF	OFF	ON	3.9
ON	OFF	OFF	OFF	OFF	ON	4.0
OFF	OFF	OFF	OFF	OFF	ON	4.1
ON	ON	ON	ON	ON	OFF	4.2
OFF	ON	ON	ON	ON	OFF	4.3
ON	OFF	ON	ON	ON	OFF	4.4
OFF	OFF	ON	ON	ON	OFF	4.5
ON	ON	OFF	ON	ON	OFF	4.6
OFF	ON	OFF	ON	ON	OFF	4.7
ON	OFF	OFF	ON	ON	OFF	4.8
OFF	OFF	OFF	ON	ON	OFF	4.9
ON	ON	ON	OFF	ON	OFF	5.0
OFF	ON	ON	OFF	ON	OFF	5.1
ON	OFF	ON	OFF	ON	OFF	5.2
OFF	OFF	ON	OFF	ON	OFF	5.3
ON	ON	OFF	OFF	ON	OFF	5.4
OFF	ON	OFF	OFF	ON	OFF	5.5
ON	OFF	OFF	OFF	ON	OFF	5.6
OFF	OFF	OFF	OFF	ON	OFF	5.7
ON	ON	ON	ON	OFF	OFF	5.8
OFF	ON	ON	ON	OFF	OFF	5.9
ON	OFF	ON	ON	OFF	OFF	6.0

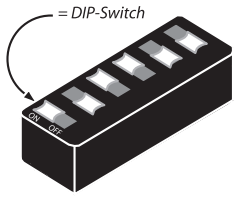

Example illustrated above:

ON-OFF-ON-ON-OFF-OFF

which gives a max flow of:

SM.1.1 - 0.685 l/sec and
SM.2.1 - 2.34 l/sec
(rotation 6.0).

Accuracy: Greatest of either ±5% of controlled flow rate or ±2% of maximum flow rate.

GENERAL DESCRIPTION

The SM Series are self balancing dynamic flow control valves that are pressure independent, two-way, modulating to accept digital or analog input signals. The valves accept 2-10V DC, 4-20mA or digital 3-point floating input signals. Each valve has an adjustable maximum flow rate setting to enable flow limitation and balancing to the coils or zones that the valves are controlling.

All SM actuators are microprocessor based with a self-calibrating feature.
The valves are all designed for double union piping connection.
They are available in two different valve bodies with end connections from 15mm-40mm.

GENERAL SPECIFICATIONS

1. PRESSURE INDEPENDENT DYNAMIC CONTROL VALVES - FLOWCON SM

1.1. Contractor shall install pressure independent dynamic control valves where indicated in drawings.
1.2. Valve shall be an electronic, dynamic, modulating, 2-way pressure independent control device.
1.3. Pressure independent dynamic control valve shall accurately control flow, independent of system pressure fluctuation.
1.4. Maximum flow setting shall be adjustable to 51 different settings within the range of the valve size.

2.a. VALVE ACTUATOR / <u>FLOWCON SM.0.0.0.1</u>

2.a.1. Valve actuator housing shall be rated to IP42.
2.a.2. Actuator shall be driven by a 24V AC or 30V DC motor, and shall accept 2-10V DC, 4-20mA or 3-point floating electric signal and shall include resistor to facilitate any of these signals.
2.a.3. Actuator shall be capable of providing 4-20mA or 2-10V DC feedback signal to the control system.
2.a.4. External LED read-out of current valve position and maximum valve position setting shall be available.

OR...

2.b. VALVE ACTUATOR / <u>FLOWCON SM.0.0.0.3, SM.0.0.0.4, SM.0.0.0.5 and SM.0.0.0.6</u>

2.b.1. Valve and actuator coupling shall have snap couplings for fast mounting and demounting.
2.b.2. Actuator housing shall be rated to IP54 including up-side-down mounting.
2.b.3. Actuator shall be driven by a 24V AC/DC motor and shall accept 0-10V DC, 2-10V DC, 0-20mA, 4-20mA, 2-position or 3-point floating electric input signal.
2.b.4. Actuator shall be capable of providing same as input, 4-20mA, 0-10V DC or 2-10V DC feedback signal to the control system.
2.b.5. Automatic calibration of valve position shall be standard.
2.b.6. Actuator shall include display and buttons for external programming of all settings.
2.b.7. External display of current valve flow, maximum valve flow, input signal, feedback signal and operational direction shall be standard.
2.b.8. Optional fail safe system to power valve to either open (max. setting) or closed position from any position in case of power failure shall be available.
2.b.9. Optional BACnet connection for remote setting and control of actuator shall be available.

3. VALVE HOUSING

3.1. Valve housing shall consist of forged brass ASTM CuZn40Pb2, rated at no less than 2500 kPa static pressure and +120°C.
3.2. Valve housing shall be permanently marked to show direction of flow.
3.3. Valve housing shall be double union end constructed with a range of pipe connections available for the appropriate pipe size.
3.4. Optional dual pressure/temperature test plugs for verifying accuracy of flow performance shall be available for all valve sizes.

4. FLOW REGULATOR / AUTOMATIC BALANCING UNIT

4.1. Flow regulation unit shall be manufactured of stainless steel and hydrogenated acrylonitrile-butadiene-rubber and shall be capable of controlling flow within ±5% rated flow rate or ±2% of maximum flow rate.
4.2. Flow regulation unit shall be accessible for change-out maintenance.

APPLICATION AND SCHEMATIC EXAMPLE

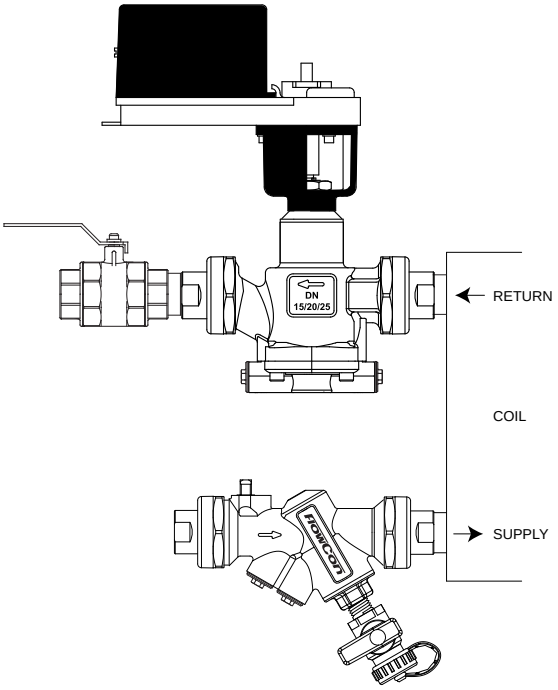

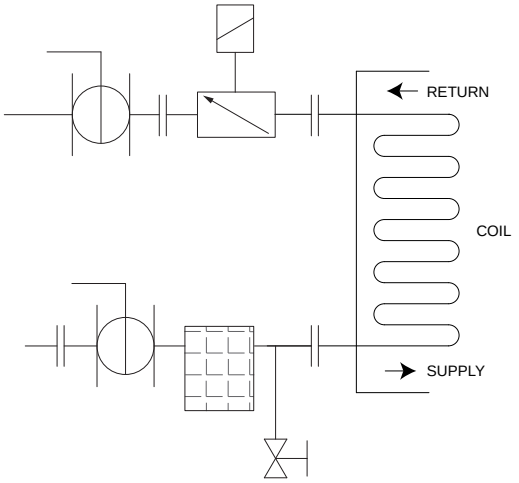

UPDATES

For latest updates please see www.flowcon.com

FlowCon SM 50-150mm

Dynamic Self Balancing Control Valve

SPECIFICATIONS

Pressure rating:	4000 kPa / 580 psi
Temperature rating, media:	-20°C to +120°C / -4°F to +248°F
Temperature rating, ambient:	-10°C to +50°C / +14°F to +122°F
Material:	
- Diaphragm:	Hydrogenated acrylonitrile-butadiene-rubber
- Body:	Ductile iron ASTM A536-65T, Class 60-45-18
- O-rings:	EPDM
- Internal metal components:	Stainless steel
End connection:	Universal flange connections which can be used with both ISO and ANSI Flanges and mounting kits are not supplied by FlowCon[1]
Body tappings:	1/4” ISO
Maximum close off pressure:	600 kPa / 87 psi
Maximum operational ΔP:	400 kPaD / 58 psid
Flow rate range:	1.48-29.5 l/sec / 23.4-468 GPM

Note1: 2x16mm studs and 4x16mm bolts with nuts are supplied with SM.3.x.x.x.

DIMENSIONS AND WEIGHTS (NOMINAL) (measured in mm unless noted)

Model no.	Valve size	L	H1	H2	Weight[2] (kgs.)
SM.3.X	50	224	252	95	15.0[3]
	65				
	80				
SM.4.X	80	320	292	135	31.0
	100				32.0 (SM.4.3)
SM.5.X	125	422	343	180	61.0
	150				

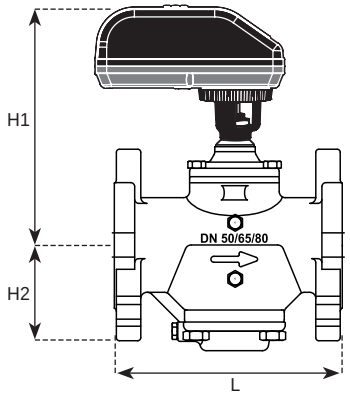

Note 2: Weight includes valve and actuator.
Note 3: Including studs, bolts and nuts provided with valve.

MODEL NUMBER SELECTION[4]

SM . ____ . ____ . B . ____

Insert valve body size:
3=50-80mm, 2”-3” 4=80-100mm, 3”-4” 5=125-150mm, 5”-6”

Insert dP control range:
0=35-400 kPaD, 5.1-58 psid (SM.3 only)
1=35-400 kPaD, 5.1-58 psid
2=60/80-400 kPaD, 8.7/11.6-58 psid
3=60-400 kPaD, 8.7-58 psid (SM.4 only)

Insert p/t plug requirements:
B=p/t plugs (standard)

Insert actuator selection:
3=display (SM.0.0.0.3) 4=display and failsafe (SM.0.0.0.4) 5=display and BACnet (SM.0.0.0.5) 6=display, BACnet and failsafe (SM.0.0.0.6)

Example: SM.3.1.B.4=SM 2”-3” body for 5.1-58 psid with p/t plugs and failsafe actuator.

Note 4: Model no. and pressure range are indicated on label affixed to body.

ACTUATOR SPECIFICATIONS[5]

FlowCon SM.0.0.0.3, SM.0.0.0.4,
SM.0.0.0.5 (with BACnet) and SM.0.0.0.6 (with BACnet) actuators

Supply voltage:	24V AC/DC
Power consumption:	12VA
Frequency:	50/60 HZ
Control input:	0-10V DC, 2-10V DC, 0-20mA, 4-20mA, 2-position or 3-point floating
Feedback position output:	Automatic match of control input, 0-10V DC, 2-10V DC or 4-20mA
Turn time:	190 seconds (from closed to fully open valve)
Electrical connection:	5 wires 22 AWG halogen free cable, 1 meter For BACnet versions another 3 wires 22 AWG halogen free cable, 1 meter
Direction of rotation:	Bi-directional
Humidity rating:	5 to 95% RH non condensing
Housing material:	UL94 V0-rated plastic
Housing insulation:	IP54 including up-side-down mounting
Programming:	External programming of all settings, interface of buttons and display
Calibration:	Automatic calibration at startup
Valve - actuator coupling:	Easy snap coupling
BACnet device profile:	BACnet Application Specific Controller (B-ASC) type server
BACnet protocol:	BACnet Master Slave/Token passing (MS/TP)
BACnet baud rates supported:	9600, 19200, 38400 and 76800
BACnet services (BIBBS) supported:	DS-RP-B, DS-WP-B, DM-DDB-B, DM-DOB-B and DM-DCC-B.

Note 5: FlowCon warranty is voided using other actuators than supplied or recommended by FlowCon International A/S.

FLOW RATE TABLE

Model no.	Valve size		Control range		Minimum setting			Maximum setting			Shut-off leakage
	mm	inch	kPaD	psid	l/sec	l/hr	GPM	l/sec	l/hr	GPM	
SM.3.0	50	2”	35-400	5.1-58	1.48	5310	23.4	4.16	15000	65.9	Leakage<0.2% of Kvs, Kvs=24 m³/hr
	65	2 1/2”									
	80	3”									
SM.3.1	50	2”	35-400	5.1-58	2.57	9240	40.7	7.15	25700	113	Leakage<0.2% of Kvs, Kvs=39.5 m³/hr
	65	2 1/2”									
	80	3”									
SM.3.2	50	2”	80-400	11.6-58	3.55	12800	56.3	9.89	35600	157	
	65	2 1/2”									
	80	3”									
SM.4.1	80	3”	35-400	5.1-58	3.49	12600	55.4	9.38	33800	149	Leakage<0.2% of Kvs, Kvs=58.3 m³/hr
	100	4”									
SM.4.2	80	3”	60-400	8.7-58	4.73	17000	75.0	14.2	51000	225	
	100	4”									
SM.4.3	80	3”	60-400	8.7-58	3.68	13300	58.3	20.2	72700	320	Leakage<0.2% of Kvs, Kvs=89 m³/hr
	100	4”									
SM.5.1	125	5”	35-400	5.1-58	6.48	23300	103	23.3	83800	369	Leakage<0.2% of Kvs, Kvs=132,3 m³/hr
	150	6”									
SM.5.2	125	5”	60-400	8.7-58	7.10	25600	113	29.5	106000	468	
	150	6”									

Accuracy: Greatest of either ±5% of controlled flow rate or ±2% of maximum flow rate.

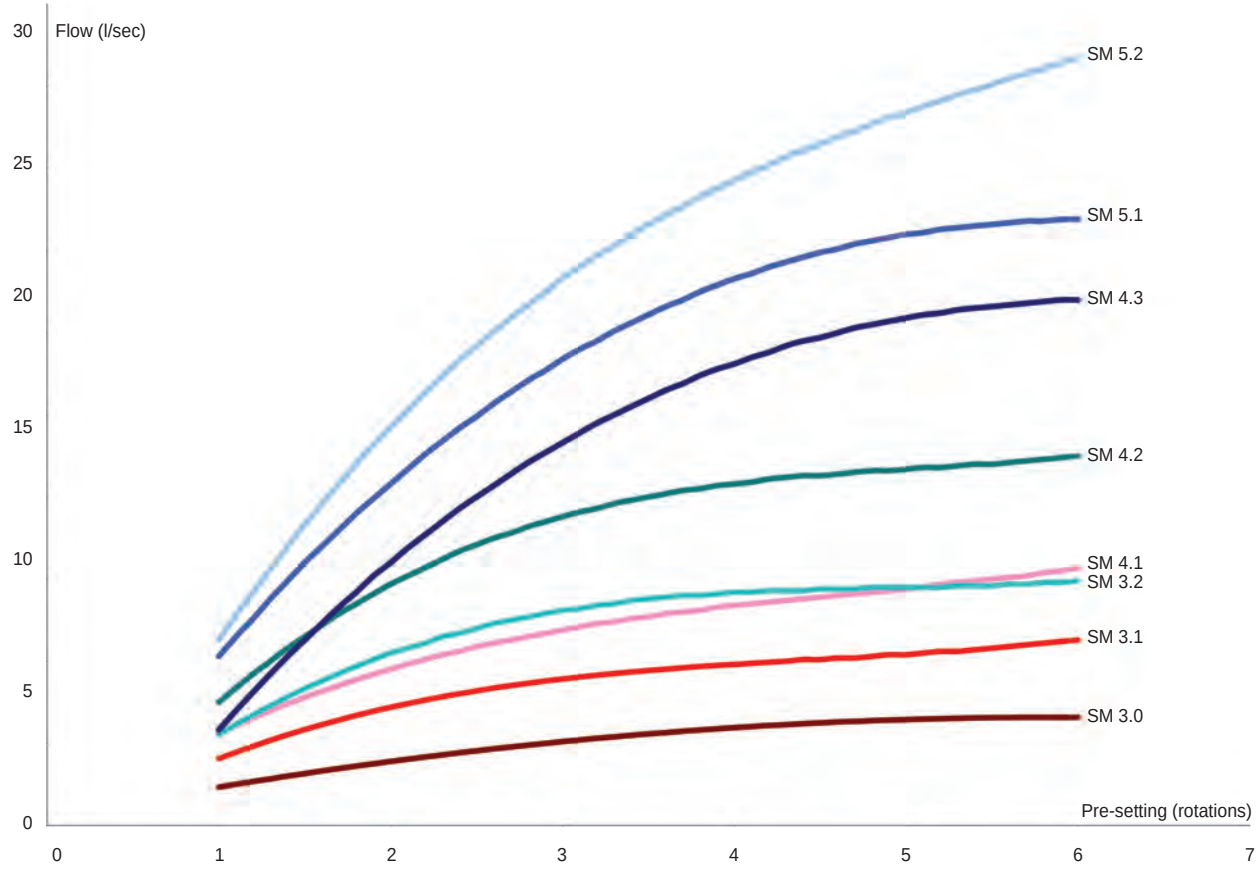

FLOW RATE SETTING - VALVE SIZE DN50-DN80

Maximum Flow Rate								
Valve size: DN50-DN80 · 2”-3”								
35-400 kPaD 5.1-58 psid			35-400 kPaD 5.1-58 psid			80-400 kPaD 11.6-58 psid		
SM.3.0			SM.3.1			SM.3.2		
l/sec	l/hr	GPM	l/sec	l/hr	GPM	l/sec	l/hr	GPM
1.48	5310	23.4	2.57	9240	40.7	3.55	12800	56.3
1.58	5700	25.1	2.81	10100	44.6	3.85	13900	61.0
1.69	6080	26.8	3.05	11000	48.3	4.13	14900	65.5
1.79	6460	28.4	3.27	11800	51.9	4.41	15900	69.9
1.90	6830	30.1	3.49	12500	55.2	4.67	16800	74.0
2.00	7190	31.6	3.69	13300	58.4	4.92	17700	78.0
2.09	7540	33.2	3.88	14000	61.5	5.16	18600	81.7
2.19	7880	34.7	4.06	14600	64.3	5.38	19400	85.3
2.28	8220	36.2	4.23	15200	67.0	5.60	20200	88.8
2.37	8540	37.6	4.39	15800	69.6	5.81	20900	92.1
2.46	8860	39.0	4.54	16300	72.0	6.01	21600	95.2
2.55	9170	40.4	4.68	16900	74.2	6.19	22300	98.2
2.63	9470	41.7	4.82	17300	76.4	6.37	22900	101
2.71	9770	43.0	4.94	17800	78.4	6.54	23600	104
2.79	10100	44.3	5.06	18200	80.2	6.71	24100	106
2.87	10300	45.5	5.17	18600	82.0	6.86	24700	109
2.95	10600	46.7	5.28	19000	83.7	7.00	25200	111
3.02	10900	47.8	5.38	19400	85.2	7.14	25700	113
3.09	11100	49.0	5.47	19700	86.6	7.28	26200	115
3.16	11400	50.0	5.55	20000	88.0	7.40	26600	117
3.22	11600	51.1	5.63	20300	89.2	7.52	27100	119
3.29	11800	52.1	5.70	20500	90.4	7.63	27500	121
3.35	12000	53.1	5.77	20800	91.5	7.74	27900	123
3.41	12300	54.0	5.84	21000	92.5	7.84	28200	124
3.46	12500	54.9	5.90	21200	93.5	7.94	28600	126
3.52	12700	55.8	5.96	21400	94.4	8.03	28900	127
3.57	12900	56.6	6.01	21600	95.2	8.12	29200	129
3.62	13000	57.4	6.06	21800	96.0	8.20	29500	130
3.67	13200	58.2	6.10	22000	96.8	8.28	29800	131
3.72	13400	58.9	6.15	22100	97.5	8.36	30100	133
3.76	13500	59.6	6.19	22300	98.2	8.44	30400	134
3.80	13700	60.2	6.23	22400	98.8	8.51	30600	135
3.84	13800	60.9	6.27	22600	99.4	8.58	30900	136
3.88	14000	61.4	6.31	22700	101	8.65	31100	137
3.91	14100	62.0	6.35	22900	101	8.72	31400	138
3.94	14200	62.5	6.39	23000	101	8.78	31600	139
3.97	14300	63.0	6.42	23100	102	8.85	31900	140
4.00	14400	63.4	6.46	23300	102	8.91	32100	141
4.03	14500	63.8	6.50	23400	103	8.98	32300	142
4.05	14600	64.2	6.54	23500	104	9.04	32600	143
4.07	14700	64.5	6.58	23700	104	9.11	32800	144
4.09	14700	64.8	6.62	23800	105	9.18	33000	145
4.11	14800	65.1	6.67	24000	106	9.25	33300	147
4.12	14800	65.3	6.72	24200	106	9.32	33500	148
4.13	14900	65.5	6.77	24400	107	9.39	33800	149
4.14	14900	65.7	6.82	24600	108	9.46	34100	150
4.15	14900	65.8	6.88	24800	109	9.54	34300	151
4.16	15000	65.9	6.94	25000	110	9.62	34600	153
4.16	15000	65.9	7.01	25200	111	9.71	34900	154
4.16	15000	65.9	7.08	25500	112	9.79	35300	155
4.16	15000	65.9	7.15	25700	113	9.89	35600	157

Maximum Flow Rate								
Valve size: DN80 and DN100 · 3”-4”								
35-400 kPaD 5.1-58 psid			60-400 kPaD 8.7-58 psid			60-400 kPaD 8.7-58 psid		
SM.4.1			SM.4.2			SM.4.3		
l/sec	l/hr	GPM	l/sec	l/hr	GPM	l/sec	l/hr	GPM
3.49	12600	55.4	4.73	17000	75.0	3.68	13300	58.3
3.88	14000	61.6	5.29	19000	83.8	4.42	15900	70.0
4.26	15300	67.5	5.82	21000	92.3	5.13	18500	81.3
4.61	16600	73.0	6.33	22800	100	5.82	21000	92.3
4.94	17800	78.4	6.82	24500	108	6.50	23400	103
5.26	18900	83.4	7.28	26200	115	7.15	25700	113
5.56	20000	88.1	7.72	27800	122	7.78	28000	123
5.84	21000	92.6	8.14	29300	129	8.40	30200	133
6.11	22000	96.9	8.54	30700	135	8.99	32400	142
6.36	22900	101	8.91	32100	141	9.57	34400	152
6.60	23800	105	9.27	33400	147	10.1	36400	160
6.82	24600	108	9.61	34600	152	10.7	38400	169
7.03	25300	111	9.93	35700	157	11.2	40200	177
7.23	26000	115	10.2	36800	162	11.7	42100	185
7.41	26700	117	10.5	37800	167	12.2	43800	193
7.58	27300	120	10.8	38800	171	12.6	45500	200
7.73	27800	123	11.0	39700	175	13.1	47100	207
7.88	28400	125	11.3	40500	178	13.5	48700	214
8.01	28800	127	11.5	41300	182	13.9	50200	221
8.14	29300	129	11.7	42000	185	14.3	51600	227
8.25	29700	131	11.9	42700	188	14.7	53000	233
8.35	30100	132	12.0	43400	191	15.1	54300	239
8.45	30400	134	12.2	43900	194	15.4	55600	245
8.53	30700	135	12.4	44500	196	15.8	56800	250
8.61	31000	137	12.5	45000	198	16.1	58000	255
8.68	31300	138	12.6	45500	200	16.4	59100	260
8.75	31500	139	12.7	45900	202	16.7	60200	265
8.80	31700	140	12.9	46300	204	17.0	61200	269
8.85	31900	140	13.0	46700	205	17.3	62100	274
8.90	32000	141	13.1	47000	207	17.5	63000	278
8.94	32200	142	13.1	47300	208	17.8	63900	281
8.97	32300	142	13.2	47600	209	18.0	64700	285
9.00	32400	143	13.3	47800	210	18.2	65500	288
9.03	32500	143	13.4	48100	212	18.4	66200	292
9.05	32600	143	13.4	48300	213	18.6	66900	295
9.07	32600	144	13.5	48500	214	18.8	67600	297
9.09	32700	144	13.5	48700	214	18.9	68200	300
9.10	32800	144	13.6	48800	215	19.1	68700	303
9.12	32800	145	13.6	49000	216	19.2	69200	305
9.13	32900	145	13.7	49200	217	19.4	69700	307
9.15	32900	145	13.7	49300	217	19.5	70200	309
9.16	33000	145	13.7	49500	218	19.6	70600	311
9.18	33000	145	13.8	49600	218	19.7	70900	312
9.19	33100	146	13.8	49800	219	19.8	71300	314
9.21	33200	146	13.9	49900	220	19.9	71600	315
9.23	33200	146	13.9	50100	220	20.0	71900	316
9.25	33300	147	14.0	50200	221	20.0	72100	317
9.28	33400	147	14.0	50400	222	20.1	72300	318
9.31	33500	148	14.1	50600	223	20.1	72500	319
9.34	33600	148	14.1	50800	224	20.2	72600	320
9.38	33800	149	14.2	51000	225	20.2	72700	320

Maximum Flow Rate					
Valve size: DN125 and DN150 · 5”-6”					
35-400 kPaD 5.1-58 psid			60-400 kPaD 8.7-58 psid		
SM.5.1			SM.5.2		
l/sec	l/hr	GPM	l/sec	l/hr	GPM
6.48	23300	103	7.10	25600	113
7.24	26100	115	8.06	29000	128
7.98	28700	126	8.98	32300	142
8.70	31300	138	9.87	35500	157
9.39	33800	149	10.7	38600	170
10.1	36200	160	11.6	41600	183
10.7	38600	170	12.4	44500	196
11.4	40900	180	13.1	47300	208
12.0	43100	190	13.9	50000	220
12.6	45200	199	14.6	52600	232
13.1	47300	208	15.3	55100	243
13.7	49300	217	16.0	57500	253
14.2	51200	226	16.6	59800	264
14.8	53100	234	17.2	62100	273
15.3	54900	242	17.8	64200	283
15.7	56600	249	18.4	66300	292
16.2	58300	257	19.0	68300	301
16.6	59900	264	19.5	70200	309
17.1	61500	271	20.0	72100	317
17.5	63000	277	20.5	73800	325
17.9	64400	284	21.0	75500	333
18.3	65800	290	21.4	77200	340
18.6	67100	295	21.9	78700	347
19.0	68300	301	22.3	80200	353
19.3	69500	306	22.7	81700	360
19.6	70700	311	23.1	83100	366
19.9	71700	316	23.4	84400	372
20.2	72800	320	23.8	85700	377
20.5	73800	325	24.1	86900	383
20.7	74700	329	24.5	88100	388
21.0	75600	333	24.8	89200	393
21.2	76400	336	25.1	90300	398
21.4	77200	340	25.4	91400	402
21.6	77900	343	25.7	92400	407
21.8	78600	346	25.9	93400	411
22.0	79200	349	26.2	94300	415
22.2	79800	351	26.5	95200	419
22.3	80300	354	26.7	96100	423
22.5	80800	356	26.9	97000	427
22.6	81300	358	27.2	97800	431
22.7	81700	360	27.4	98600	434
22.8	82100	361	27.6	99400	438
22.9	82400	363	27.8	100000	441
23.0	82700	364	28.1	101000	445
23.0	83000	365	28.3	102000	448
23.1	83200	366	28.5	102000	451
23.2	83400	367	28.7	103000	455
23.2	83500	368	28.9	104000	458
23.2	83600	368	29.1	105000	461
23.3	83700	369	29.3	105000	464
23.3	83800	369	29.5	106000	468

Accuracy: Greatest of either ±5% of controlled flow rate or ±2% of maximum flow rate.

FLANGE MATCH SM HOUSING

Model no.	Flange size (inch)	ASME B16.5 weld neck flanges		ASME B16.5 slip on flanges		Flange size (mm)	EN1092-1[6]				EN1092-1[7]			
		Class 150	Class 300	Class 150	Class 300		PN10	PN16	PN25	PN40	PN10	PN16	PN25	PN40
SM.3.x	2	-	✓	-	✓	50	✓	✓	✓	✓	✓	✓	✓	✓
	2 1/2	✓	✓	✓	✓	65	✓	✓	✓	✓	✓	✓	✓	✓
	3	✓	✓	-	-	80	✓	✓	✓	✓	-	-	-	-
SM.4.x	3	✓	✓	✓	✓	80	✓	✓	✓	✓	✓	✓	✓	✓
	4	✓	✓	-	-	100	✓	✓	✓	✓	-	-	-	-
SM.5.x	5	✓	✓	✓	✓	125	✓	✓	✓	✓	✓	✓	✓	✓
	6	✓	-	-	-	150	✓	✓	✓	✓	-	-	-	-

Note 6: Type 02 and 35/36/37 (loose plate flange with weldring neck / pressed collar with long neck / pressed collar) or
Type 04 and 34 (loose plate flange with weld-neck collar) or
Type 11 with flange facing A/B (weld-neck flange with flat face or raised face).

Note 7: Type 12 with flange facing A/B (hubbed slip-on flange with flat face or raised face).

GENERAL DESCRIPTION

The SM Series are self balancing dynamic flow control valves that are pressure independent, two-way, modulating to accept digital or analog input signals. The valves accept 2-10V DC, 4-20mA, digital 2-position or digital 3-point floating input signals. Each valve has an adjustable maximum flow rate setting to enable flow limitation and balancing to the coils or zones that the valves are controlling.

All SM actuators are microprocessor based with a self-calibrating feature.
The SM valve is of the wafer style for fitting between flanges. They are available in three different valve bodies for flange connections.

GENERAL SPECIFICATIONS

1. PRESSURE INDEPENDENT DYNAMIC CONTROL VALVE FLOWCON SM

1.1. Contractor shall install dynamic control valves where indicated in drawings.
1.2. Valve shall be an electronic, dynamic, modulating, 2-way pressure independent control device.
1.3. Pressure independent dynamic control valve shall accurately control flow, independent of system pressure fluctuation.
1.4. Maximum flow setting shall be adjustable to 51 different settings within the range of the valve size.
1.5. Valve and actuator coupling shall have snap couplings for fast mounting and demounting.

2. VALVE ACTUATOR

2.1. Valve and actuator coupling shall have snap couplings for fast mounting and demounting.
2.2. Actuator housing shall be rated to IP54 including up-side-down mounting.
2.3. Actuator shall be driven by a 24V AC/DC motor and shall accept 0-10V DC, 2-10V DC, 0-20mA, 4-20mA, 2-position or 3-point floating electric input signal.
2.4. Actuator shall be capable of providing same as input, 4-20mA, 0-10V DC or 2-10V DC feedback signal to the control system.
2.5. Automatic calibration of valve position shall be standard.
2.6. Actuator shall include display and buttons for external programming of all settings.
2.7. External display of current valve flow, maximum valve flow, input signal, feedback signal and operational direction shall be standard.
2.8. Optional fail safe system to power valve to either open (max. setting) or closed position from any position in case of power failure shall be available.
2.9. Optional BACnet connection for remote setting and control af actuator shall be available.

continues...

GENERAL SPECIFICATIONS (continued)

3. VALVE HOUSING

3.1. Valve housing shall consist of ductile iron ASTM A536-65T, Class 60-45-18 rated at no less than 4000 kPa static pressure and +120°C.

3.2. Valve housing shall be permanently marked to show direction of flow.

3.3. Valve housing shall be for installation between flanges.

3.4. Dual pressure/temperature test plugs for verifying accuracy of flow performance shall be provided for all valve sizes.

3.5. Identification tags shall be available for all valves; tags shall be indelibly marked with part number, production date and pressure differential range. Tags shall be of aluminum and in size 50mm x 25mm.

4. FLOW REGULATOR / AUTOMATIC BALANCING UNIT

4.1. Flow regulation unit shall be manufactured of stainless steel and hydrogenated acrylonitrile-butadiene-rubber and shall be capable of controlling flow within ±5% rated flow rate or ±2% of maximum flow rate.

4.2. Flow regulation unit shall be accessible for change-out or maintenance.

APPLICATION AND SCHEMATIC EXAMPLE

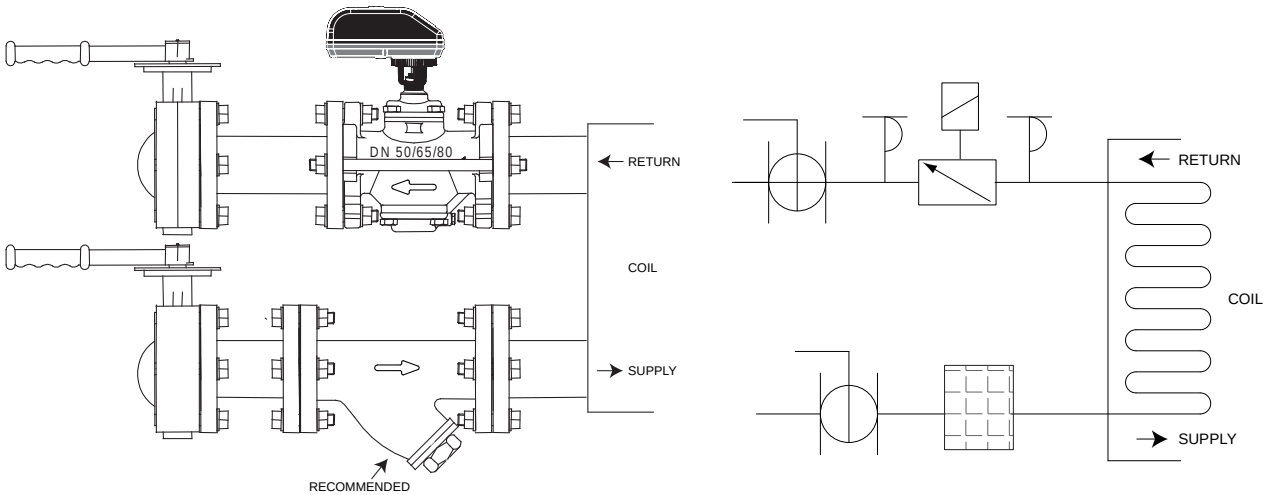

UPDATES

For latest updates please see www.flowcon.com

FlowCon International

FlowCon EVS / EVC / ABM

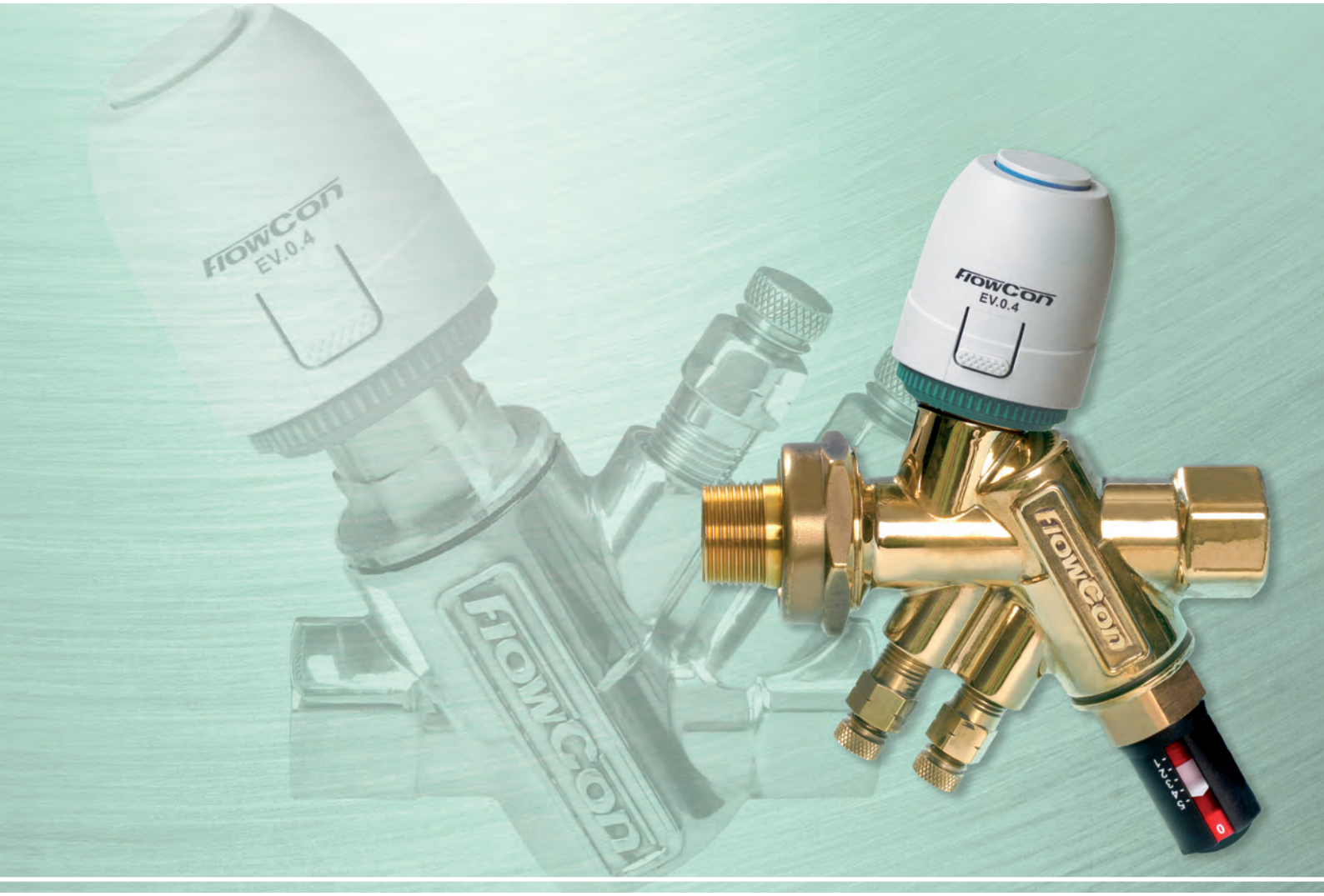

Balanced Temperature Control Valves

FlowCon EVS, EVC and ABM

Temperature Control and Automatic Balancing combined in a Single Unit for Total Flow Control

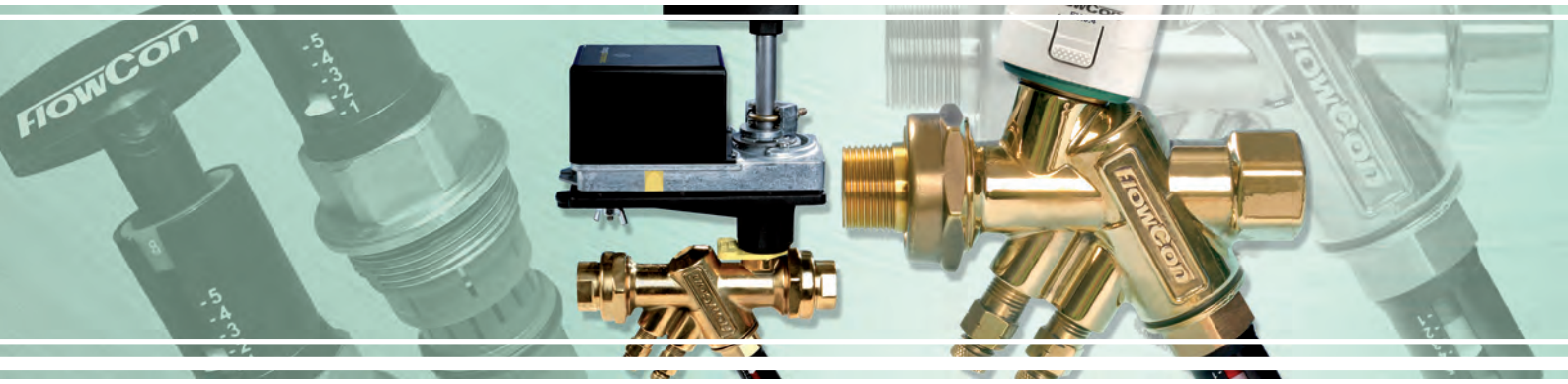

The FlowCon EVS/EVC valves are particularly designed to give the optimal indoor comfort. The valves will provide ON/OFF or analog temperature control and self balancing flow control for use with fan coil units in air-conditioning and cooling ceilings or as zone valve in heating systems.

For larger applications the “sister model” FlowCon ABM can be used. The ABM valve is suitable for applications in connection with building automation systems where central control of the comfort in the building is required. This model combines an electrically actuated ball valve in series with an automatic flow limiting cartridge.

The flow regulator is different within the three types, i.e. FlowCon EVS is regulated by a stainless steel cartridge and the FlowCon EVC and ABM by an adjustable composite cartridge.

The EVS-insert is designed for use in connection with the valve bodies FlowCon A, AB or ABV1. The EVC valve has its own unique valve house. The ABM valve is designed for use with the FlowCon ABV-bodies with modification to the ball valve. The control signal for either actuator can be provided by for instance a thermostat.

Features and Benefits

- **Automatic balancing**, the correct flow rate for each circuit is achieved automatically.
- **Dynamic balancing**, the correct flow rate is maintained as each valve compensates for pressure fluctuations in the system.
- **Actuator** selection, ON/OFF or analog, normally closed.
- **Easily accessible cartridge** for flow rate adjustment or maintenance.
- **Pressure/temperature measurement plugs** for verifying operating pressure differential range or checking ΔT across the coil (not available on FlowCon A-bodies).
- **Union end connection** for ease of installation and wide selection of end fittings (FlowCon ABV, EVC and ABM) or **fixed female threaded ends** (FlowCon A and AB).

Principle of Cartridge Operation - FlowCon EVC and ABM

The FlowCon EVC and ABM valves utilize an adjustable composite cartridge. The internal adjustable cartridge is adjusted by means of a 6mm Hex key to one of 8 different flow rates. The external adjustable cartridge, called the FlowCon E-JUST, is operated by means of a special FlowCon key, and flow rate is chosen from 41 different possibilities.

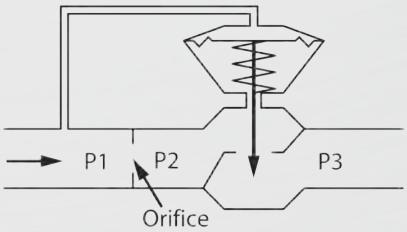

For the FlowCon EVC and ABM, the principle of operation is shown above and the principle of construction is shown below. P1 and P3 are system pressures, P1÷P3 is the total pressure drop across the valve. P2 is set by the diaphragm acting in reaction to P1 in the upper diaphragm chamber. Interacting with the spring, P1÷P2 remains constant, keeping a constant ΔP across the orifice areas. The result is a constant flow rate through the valve, independent of pressure fluctuations.

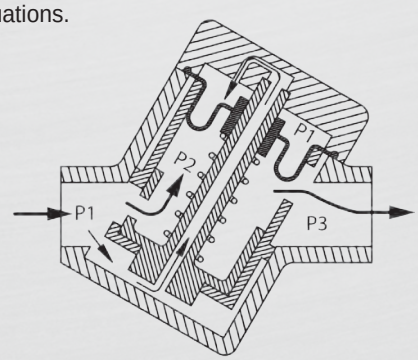

Below its pressure differential range, the valve acts as a fixed orifice. This allows the temperature control part of the valve to operate with valve authority up to the set flow rate maximum.

In case the differential pressure is higher than the defined max. ΔP for the cartridge, the diaphragm may be damaged.

Principle of Cartridge Operation - FlowCon EVS

The FlowCon EVS valve utilizes a factory pre-set stainless steel cartridge. Below its pressure differential range it acts as a fixed orifice.

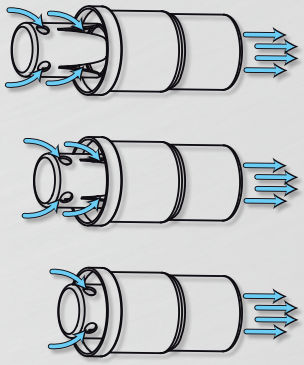

Within operating pressure differential range, the effective open orifice area of the cartridge is automatically adjusted to the point where the specified flow rate will be delivered (as the pressure differential increases, the open area closes and as it decreases, the area opens).

When the pressure differential range is exceeded, the valve again becomes a fixed orifice device. This ensures that no part of the system is starved or shut down.

Equal Percentage Control Characteristic

The patented parabolic Optimizer® in the FlowCon ABM is unique from any other in the industry because it is actually press-fitted into the ball, resulting in less wear and higher close-off pressure. Optimizer® means equal percentage flow characteristic and linear heat transfer, i.e. the heat output at the coil is linear when compared to the open area of the valve.

The physical design of the Optimizer® means that once it is press-fitted into the ball, it cannot be forced out because the back side of the Optimizer® is too large to be forced through the ball's port.

As pressure increases behind the Optimizer® insert, it compresses even further into the ball's port, making a tight fit even tighter for guaranteed protection against leak-by.

The Optimizer® is able to modulate in systems where the differential pressure is over 1100 kPaD without influencing life or performance of the Optimizer®, which is quite unique compared with other similar solutions.

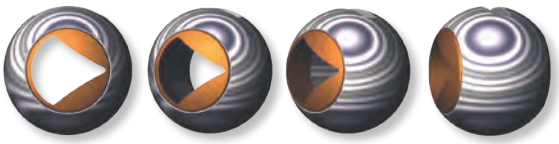

Illustration of Optimizer® movement.

Technical Data

For further information and part number selection pls. see FlowCon tech note and the catalogue: FlowCon Inserts and Cartridges. For latest updates please see ***www.flowcon.com.***

		A/AB/ABV DN15/20/25 with EVS insert	EVC DN15/20/25	ABM DN15/20/25	ABM DN25/32/40
Static Pressure	(kPa)	1600	1600	2500	2500
	(psi)	230	230	360	360
Temperature Rating	(ºC)	-20 to +120 / 0 to +60	-20 to +120 / 0 to +60	-20 to +120 / 0 to +50	-20 to +120 / 0 to +50
Media/Ambient	(ºF)	-4 to +248 / 32+ to +140	-4 to +248 / 32+ to +140	-4 to +248 / +32 to +122	-4 to +248 / +32 to +122
Pressure Drop Data		NOTE: For pump head calculations, add the minimum pressure differential for the index circuit to the other components pressure losses (i.e. valves, coil, etc.)			
Valve Body	Kv-value	2.60	2.00	Depend on Optimizer®	Depend on Optimizer®
	Cv-value	3.00	2.33		

Stainless Steel Cartridge		F3601xx	F3602xx	F3604xx		
Cartridge Size	(mm)	20	20	20	Available with an adapter	Available with an adapter
	(inch)	3/4"	3/4"	3/4"		
Pressure Differential	(kPaD)	10-95	22-210	40-390		
	(psid)	1-14	2-32	4-57		
Flow Rate	(l/sec)	0.0210-0.315	0.0347-0.505	0.0473-0.631		
	(GPM)	0.333-5.00	0.550-8.00	0.750-10.0		

Standard Composite Cart.			ABV1.Y.x[1] grey/red/blue/black/green	ABV1.G.x[1] grey/red/blue/black/green	ABV2.X.x red/white	ABV2.C.x red/white	ABV2.D.x red/white
Cartridge Size	(mm)	N/A	20	20	40	40	40
	(inch)		3/4"	3/4"	1 1/2"	1 1/2"	1 1/2"
Pressure Differential	(kPaD)		15-130	30-400	15-130	22-300	30-410
	(psid)		2.2-18.9	4.4-58	2.2-18.9	3.2-43.5	4.4-59.5
Flow Rate	(l/sec)		0.0081-0.273	0.0117-0.408	0.17-0.85	0.23-1.21	0.27-1.43
	(GPM)		0.13-4.33	0.185-6.46	2.69-13.5	3.65-19.2	4.28-22.7

E-JUST Cartridge			E-JUST1.Y.x[1] black/green	E-JUST1.Y.R[1] red	E-JUST1.G.R[1] red	E-JUST1.G.x[1] black/green	E-JUST2.Y.G green
Cartridge Size	(mm)	N/A	20	20	20	20	40
	(inch)		3/4"	3/4"	3/4"	3/4"	1 1/2"
Pressure Differential	(kPaD)		17-210	17-200	30-400	35-400	17-400
	(psid)		2.5-30	2.5-29	4.4-58	5.1-58	2.5-58
Flow Rate	(l/sec)		0.0278-0.169	0.0767-0.229	0.113-0.352	0.0383-0.249	0.149-1.62
	(GPM)		0.44-2.68	1.22-3.60	1.79-5.57	0.61-3.94	2.36-25.7

Note 1: Standard composite cartridge type Y and G and E-JUST cartridge type Y and G are to be used in either EVC DN15/20/25 or in ABM DN15/20/25.

FlowCon EVS 15-25mm

Plug-in Insert for Temperature Control of Automatic Balancing Valve

SPECIFICATIONS

Insert:

Pressure rating:	1600 kPa / 232 psi
Temperature rating, media[1]:	-20°C to +120°C / -4°F to +248°F
Temperature rating, ambient:	0°C to +60°C / +32°F to +140°F
Material:	
- Cartridge:	Stainless steel AISI type 304
- Body:	Brass ASTM B584 and polyoxymethylene
- Spring:	Stainless steel type 17-7
- Spindel:	Brass
- Seat plug and o-rings:	EPDM
Maximum close off pressure:	400 kPa / 58 psi
Shut off leakage:	Tight
Flow rate range:	0.0210-0.631 l/sec

Valve:

Material:	
- Body:	Forged brass ASTM CuZn40Pb2
- Ball valve:	ABV: Chemically nickel plated brass ball
End Connections:	A: Female ISO or NPT
	AB: Female ISO or NPT
	ABV: Union end connections in brass alloy ISO or NPT

Note 1: Stated temperature rating is defined due to no external spindle condensation.

SPECIFICATIONS (continued)

FlowCon Actuators:

FlowCon Actuator[2]	EV.0.2	EV.0.3	EV.0.4	EV.0.5	EV.1.3	EV.1.4
Supply voltage	24V AC -10%/+20% 50/60Hz	230V AC ±10% 50/60Hz	24V AC/DC +20/-10% 0-60Hz	120V AC ±10% 50/60Hz	230V AC ±10% 50/60Hz	24V AC/DC +20/-10% 0-60Hz
Power consumption	1.8 watt	1.8 watt			1.8 watt	
Control signal	0-10V DC normally closed[3]	ON/OFF normally closed[3]			ON/OFF normally closed[3]	
Operation time	Approx. 2 min	Approx. 3 min			Approx. 3 min	
Ambient temperature	+0ºC to +60ºC	+0ºC to +60ºC			+0ºC to +60ºC	
Protection	IP54	IP54, class II			IP54, class II	
Cable	Plug-in, 1 meter	Fixed, 1 meter			Fixed, 1 meter	
Weight	0.130 kg	0.105 kg			0.105 kg	
Including end switch	No				Yes	
Switching point	N/A	N/A	N/A	N/A	Approx. 2mm	Approx. 2mm
Switching capacity	N/A	N/A	N/A	N/A	230V AC 5A ohm resistive load	24V AC 3A ohm resistive load

Note 2: FlowCon warranty is voided using other actuators than supplied or recommended by FlowCon International A/S.
Note 3: To ensure that the valve is in an open position during commission of the system, the actuator will be delivered in a normal open position and remain in this position until it is electrically operated first time.

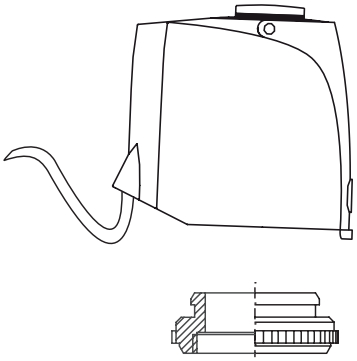

Type EV.0.2
Valve adaptor, green

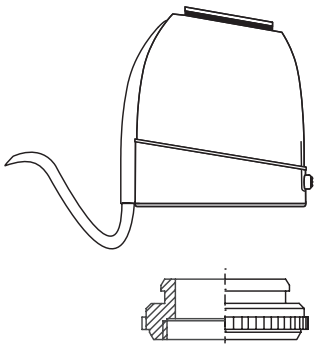

Type EV.0.3, EV.0.4, EV.0.5, EV.1.3 and EV.1.4
Valve adaptor, green

DIMENSIONS AND WEIGHTS (NOMINAL) (measured in mm unless noted)

Valve model	Actuator model	Valve size	Cartridge size	L	H1	H2	End connections C[3]			Weight (kgs.) w/o end conn.	Kv[4] (m^3/hr)
							ISO female	ISO male	Sweat		
A	EV.0.2	15	20	80	120	N/A				0.70	2.35
		20								0.65	
		25		91						0.68	
	EV.0.3 EV.0.4 EV.0.5 EV.1.3 EV.1.4	15	20	80	N/A	106				0.70	2.35
		20								0.65	
		25		91						0.68	
AB	EV.0.2	15	20	82	120	N/A				0.70	2.35
		20		94						0.75	
		25		102						0.75	
	EV.0.3 EV.0.4 EV.0.5 EV.1.3 EV.1.4	15	20	82	N/A	106				0.70	2.35
		20		94						0.75	
		25		102						0.75	
ABV1	EV.0.2	15	20	122	120	N/A	22	25	20	1.10	2.35
		20					22	25	20		
		25					-	39	22		
	EV.0.3 EV.0.4 EV.0.5 EV.1.3 EV.1.4	15	20	122	N/A	106	22	25	20	1.10	2.35
		20					22	25	20		
		25					-	39	22		

Note 3: Add end connection length to body length.
Note 4: The Kvs–value of 2.35 $m^{3/}$h, which corresponds to the temperature control and valve housing, will provide an additional pressure drop.
This additional pressure drop will provide an offset of pressure range, which needs to be added into the control range for the Flow Control Cartridge.
This offset is depended off the flow rate for the selected cartridge. See the diagram and example on page 7.

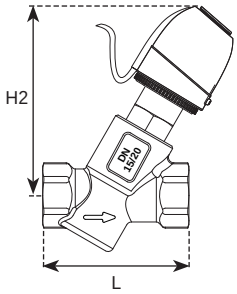

EV.0.3, EV.0.4, EV.0.5, EV.1.3 and EV1.4 on FlowCon A

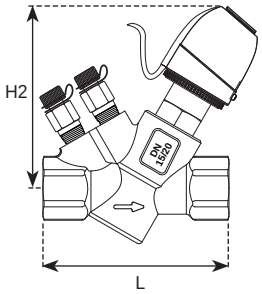

EV.0.3, EV.0.4, EV.0.5, EV.1.3 and EV1.4 on FlowCon AB 15/20mm

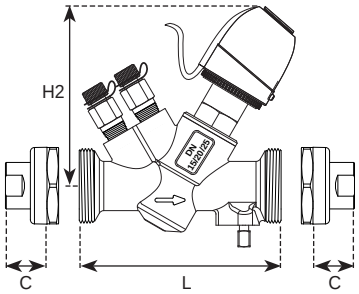

EV.0.3, EV.0.4, EV.0.5, EV.1.3 and EV1.4 on FlowCon ABV1

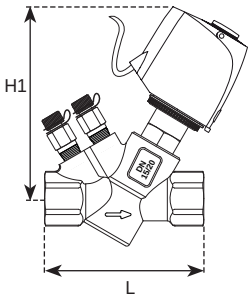

EV.0.2 on FlowCon AB 15/20mm

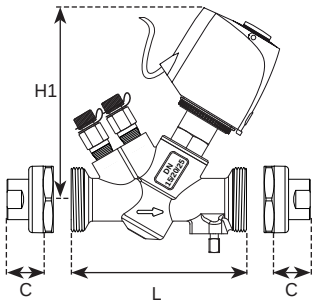

EV.0.2 on FlowCon ABV1

MODEL NUMBER SELECTION

EVS . ____ . ____ . ____ . ____ . ____ . ____ . ____ . ____ . ____

Insert type of actuator:
2=EV.0.2 3=EV.0.3 4=EV.0.4 5=EV.1.3 6=EV.1.4 7=EV.0.5

Insert type of body:
01=AB15 02=AB20 03=ABV1(15/20/25) 04=A15
05=A20 06=A25 09=AB25

Insert p/t plug requirements:
Leave it blank if no p/t plugs are required B=pressure/temperature plugs P=taps plugged

Insert inlet x outlet union end connections - leave it blank if A- or AB-body or no end connections required:

Body size	Female threaded	Male treaded	Sweat
Union end 15-25mm, 1/2”-1”	E=15mm=1/2” F=20mm=3/4”	H=15mm=1/2” I=20mm=3/4” J=25mm=1”	K=15mm L=18mm M=22mm

Insert connection standard:
I=ISO N=NPT

Insert automatic flow limiting cartridge code:
(Determine from cartridge selection chart)

Insert kPaD control range:
1=10-95 kPaD 2=22-210 kPaD 4=40-390 kPaD - leave blank if no cartridge is requird

Example: EVS.2.01.P.I.F360206.2=EVS insert in AB 15mm ISO female threaded body with plugs, 24V modulating actuator and a F360206 cartridge (0.189 l/sec, 22-210 kPaD).

FLOW RATE TABLE - STAINLESS STEEL CARTRIDGE - FOR VALVES DN15-DN25

20mm · 3/4” stainless steel cartridge									
Nominal flow rate	Pressure range, ΔP:			10-95 kPaD 1-14 psid		22-210 kPaD 2-32 psid		40-390 kPaD 4-57 psid	
				Type 1		Type 2		Type 4	
	l/sec	l/hr	GPM	Marking	FlowCon	Marking	FlowCon	Marking	FlowCon
	0.0210	75.7	0.333	11-1	F360111				
	0.0315	114	0.500	01-1	F360101				
	0.0347	125	0.550			11-2	F360211		
	0.0421	151	0.667	02-1	F360102				
	0.0473	170	0.750			01-2	F360201	11-4	F360411
	0.0631	227	1.00	03-1	F360103	02-2	F360202	01-4	F360401
	0.0694	250	1.10						
	0.0841	303	1.33	04-1	F360104			02-4	F360402
	0.0946	341	1.50			03-2	F360203		
	0.105	379	1.67	05-1	F360105				
	0.126	454	2.00	06-1	F360106	04-2	F360204	03-4	F360403
	0.147	530	2.33	07-1	F360107				
	0.158	568	2.50			05-2	F360205		
	0.168	606	2.67	08-1	F360108			04-4	F360404
	0.189	681	3.00			06-2	F360206		
	0.210	757	3.33	10-1	F360110			05-4	F360405
	0.221	795	3.50			07-2	F360207		
	0.252	908	4.00	12-1	F360112	08-2	F360208	06-4	F360406
	0.294	1060	4.67	14-1	F360114			07-4	F360407
	0.315	1140	5.00	16-1	F360116	10-2	F360210		
	0.336	1210	5.33					08-4	F360408
	0.379	1360	6.00			12-2	F360212		
	0.421	1511	6.67					10-4	F360410
	0.442	1590	7.00			14-2	F360214		
	0.505	1820	8.00			16-2	F360216	12-4	F360412
	0.589	2120	9.33					14-4	F360414
	0.631	2270	10.0					16-4	F360416

Accuracy: ±5% of controlled flow rate.

ACCESSORIES

- P/t plugs: 2 x ACC00101
- Plugs and gaskets: 2 x ACC1B03000
- Spare part, black composite part: EVS.0.0.1.

GENERAL DESCRIPTION

The standard actuators available for the FlowCon EVS valve are thermal actuators that operate ON/OFF on 24V AC/DC, 120V AC and 230V AC/DC or modulating on 24V AC respectively. ON/OFF actuators are available with end switches which can be used for controlling the fan in priority to the open position of the valve.

The EVS-insert with stainless steel cartridge will in connection with the FlowCon A, AB and ABV1 valve bodies provide temperature control and dynamic balancing for use in cooling ceilings, fan coil units in air-condition or as zone valve in heating systems.

GENERAL SPECIFICATIONS

1. AUTOMATIC BALANCING AND TEMPERATURE CONTROL VALVES - FLOWCON EVS + FLOWCON A, AB or ABV1.

1.1. Contractor shall install balancing / temperature valves where indicated in drawings.
1.2. The flow limiting device shall be available as a plug-in device for an inline valve housing.

2. VALVE ACTUATOR

2.1. Actuator shall provide a visual indication of the valve position.
2.2. The valve shall be closing when the actuator is not powered.
2.3. The valve shall withstand a shut off pressure of at least 400 kPa without allowing internal leakage.
2.4. The seat plug shall be manufactured of EPDM rubber.
2.5. The packing box for sealing the stem shall be removable with the system in operation, without allowing external leakage.

3. VALVE INSERT

3.1. The insert shall consist of forged brass ASTM B584 and polyoxymethylene, rated at no less than 1600 kPa static pressure and +120°C.
3.2. The insert shall include a lock-ring for fast fitting and re-fitting of flow regulation unit.

4. VALVE HOUSING

4.a. **FlowCon A**

4.a.1. Valve housing shall consist of forged brass ASTM CuZn40Pb2, rated at no less than 2500 kPa static pressure and +120ºC.
4.a.2. Valve housing shall be permanently marked to show direction of flow.
4.a.3. Housing shall be configured for flow regulation unit accessibility.

OR….

4.b. **FlowCon AB**

4.b.1. Valve housing shall consist of forged brass ASTM CuZn40Pb2, rated at no less than 2500 kPa static pressure and +120ºC.
4.b.2. Valve housing shall be permanently marked to show direction of flow.
4.b.3. Optional pressure/temperature test plugs for verifying accuracy of flow performance shall be available for all valve sizes.
4.b.4. Housing shall be configured for flow regulation unit accessibility.

OR….

4.c. **FlowCon ABV**

4.c.1. Valve housing shall consist of forged brass ASTM CuZn40Pb2, rated at no less than 2500 kPa static pressure and +120ºC.
4.c.2. Valve housing shall be permanently marked to show direction of flow.
4.c.3. Valve housing shall be double union end constructed with a range of pipe connections available for the appropriate pipe size.
4.c.4. Valve ball shall consist of chemically nickel plated brass (ASTM CuZn40Pb2).
4.c.5. Optional pressure/temperature test plugs for verifying accuracy of flow performance shall be available for all valve sizes.
4.c.6. Housing shall be configured for flow regulation unit accessibility.

GENERAL SPECIFICATIONS (continued)

5. FLOW REGULATOR / AUTOMATIC BALANCING UNIT

5.1. Flow regulation unit assembly shall be manufactured of AISI type 304 stainless steel and stainless steel 17-7 spring.

5.2. Flow regulation unit shall be readily accessible for change-out or maintenance.

5.3. Flow regulation unit shall be available in 3 different kPaD operational ranges, minium range shall be capable of being activated by minimum 10 kPaD. Further, the flow regulation unit shall be capable of controlling flow within ±5% of rated flow.

5.4 Indentification tags shall be available for all valves; tags shall be indelibly marked with part number and flow rate.

APPLICATION AND SCHEMATIC EXAMPLE

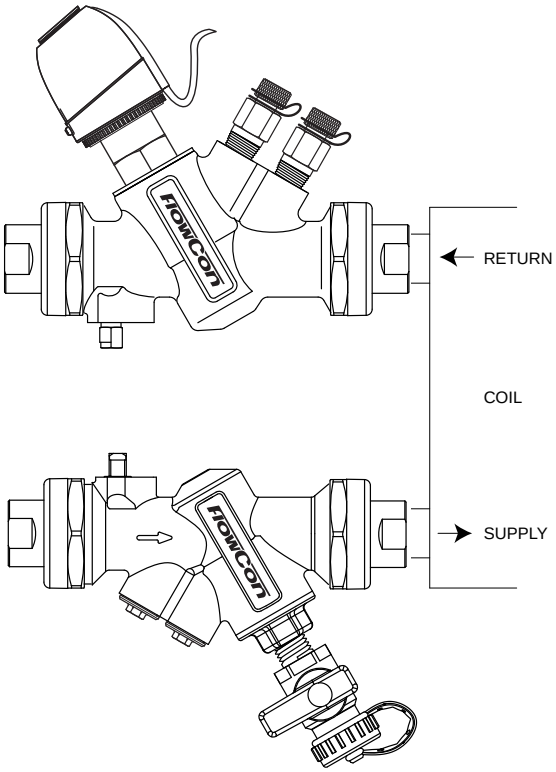

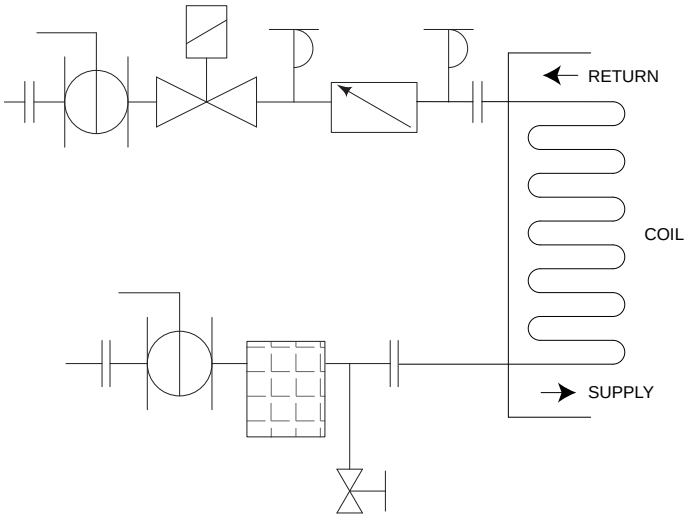

OFFSET OF PRESSURE RANGE

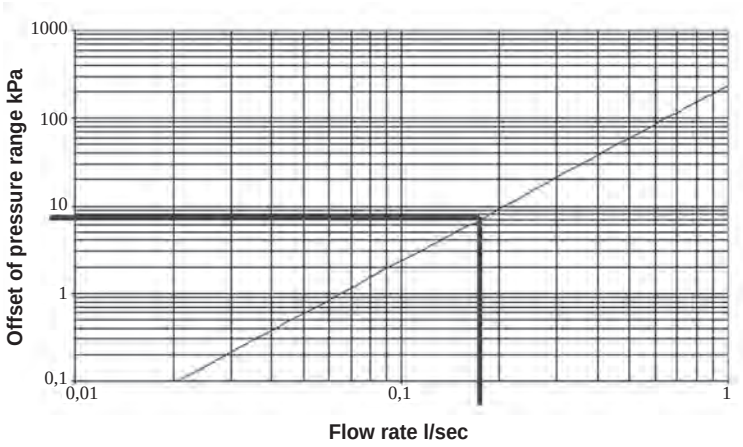

Example: The index flow 0.189 l/sec is selec-ted into the cartridge no. F360206, range 2 (22-210 kPaD) from the “cartridge selection chart” on page 4. This selection will result in an offset value of 8 kPa into a new control range of 30-218 kPa for the cartridge.

UPDATES

For latest updates please see www.flowcon.com

FlowCon EVC

Dynamic Balancing Valve with Temperature Control

SPECIFICATIONS

Valve:

Pressure rating:	1600 kPa / 230 psi
Temperature rating, media[1]:	-20°C to +120°C / -4°F to +248°F
Temperature rating, ambient:	0°C to +60°C / +32°F to +140°F
Material:	
- Cartridge:	Composite cartridges: POM (Polyoxymethylene) E-JUST cartridges: PSU (Polysulfone)
- Diaphragm:	Hydrogenated acrylonitrile-butadiene-rubber or EPDM depending on type
- Body:	Forged brass ASTM CuZn40Pb2
- EVC control insert:	Brass
- Union end connection (in-let):	Brass alloy ISO or NPT
- Seat plug and o-rings:	EPDM
Body tappings:	1/4” ISO
Maximum close off pressure:	400 kPaD / 58 psid
Shut off leakage:	Tight
Flow rate range:	0.0081-0.408 l/sec / 0.128-6.46 GPM

Note 1: Stated temperature rating is defined due to no external spindle condensation.

SPECIFICATIONS (continued)

FlowCon Actuators:

FlowCon Actuator[2]	EV.0.2	EV.0.3	EV.0.4	EV.0.5	EV.1.3	EV.1.4
Supply voltage	24V AC -10%/+20% 50/60Hz	230V AC ±10% 50/60Hz	24V AC/DC +20/-10% 0-60Hz	120V AC ±10% 50/60Hz	230V AC ±10% 50/60Hz	24V AC/DC +20/-10% 0-60Hz
Power consumption	1.8 watt	1.8 watt			1.8 watt	
Control signal	0-10V DC normally closed[3]	ON/OFF normally closed[3]			ON/OFF normally closed[3]	
Operation time	Approx. 2 min	Approx. 3 min			Approx. 3 min	
Ambient temperature	+0ºC to +60ºC	+0ºC to +60ºC			+0ºC to +60ºC	
Protection	IP54	IP54, class II			IP54, class II	
Cable	Plug-in, 1 meter	Fixed, 1 meter			Fixed, 1 meter	
Weight	0.130 kg	0.105 kg			0.105 kg	
Including end switch	No				Yes	
Switching point	N/A	N/A	N/A	N/A	Approx. 2mm	Approx. 2mm
Switching capacity	N/A	N/A	N/A	N/A	230V AC 5A ohm resistive load	24V AC 3A ohm resistive load

Note 2: FlowCon warranty is voided using other actuators than supplied or recommended by FlowCon International A/S.
Note 3: To ensure that the valve is in an open position during commission of the system, the actuator will be delivered in a normal open position and remain in this position until it is electrically operated first time.

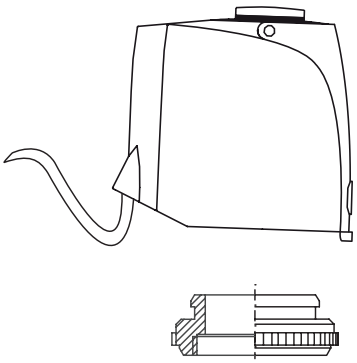

Type EV.0.2
Valve adaptor, green

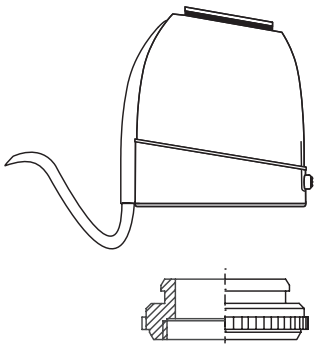

Type EV.0.3, EV.0.4, EV.0.5, EV.1.3 and EV.1.4
Valve adaptor, green

DIMENSIONS AND WEIGHTS (NOMINAL) (measured in mm unless noted)

Valve model	Actuator model	Valve size	Cartridge size	L	H1	H2	H3 (with E-JUST)	Inlet end connections C[4]				Weight (kgs.) w/o end conn.	Kv[5] (m^3/hr)
								Size	ISO female	ISO male	Sweat		
EVC.1	EV.0.2	15	20	115	96	67	79,5 (not shown)	15	22	25	20	1.00	1.9
EVC.2		20						20	22	25	20	0.95	2.0
								25	N/A	39	22		
EVC.1	EV.0.3 EV.0.4 EV.0.5 EV.1.3 EV.1.4	15	20	115	93	67	79,5	15	22	25	20	1.00	1.9
EVC.2		20						20	22	25	20	0.95	2.0
								25	N/A	39	22		

Note 4: Add end connection length to body length.
Note 5: For valve body.

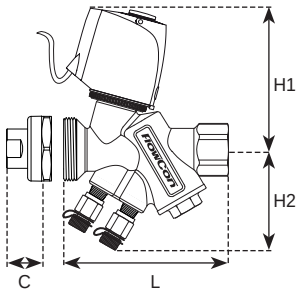

EV.0.2 on FlowCon EVC

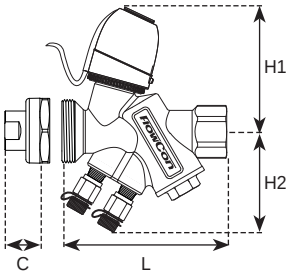

EV.0.3, EV.0.4, EV.0.5, EV.1.3 and EV1.4 on FlowCon EVC

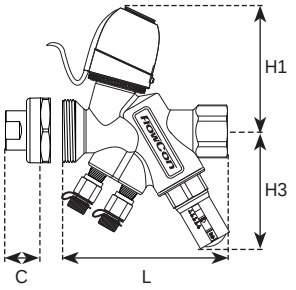

...with E-JUST

MODEL NUMBER SELECTION[6]

EVC . ____ . ____ . ____ . ____ . ____ . ____ . ____ . ____ . ____

Insert type of actuator:
2=EV.0.2 3=EV.0.3 4=EV.0.4 5=EV.1.3 6=EV.1.4 7=EV.0.5
(Determine from dimension chart)

Insert body size (OUTLET):
1=female threaded 15mm 2=female threaded 20mm

Insert p/t plug requirement:
0=taps open B=pressure temperature plugs P=taps plugged

Insert INLET union end connections - leave blank if no end connections required:

Body size	Female threaded	Male treaded	Sweat
Union end 15-25mm, 1/2”-1”	E=15mm=1/2” F=20mm=3/4”	H=15mm=1/2” I=20mm=3/4” J=25mm=1”	K=15mm L=18mm M=22mm

Insert connection standard:
I=ISO N=NPT

Insert a kPaD control range:
0 if no cartridge required
Y=15-130 kPaD (20mm standard composite cartridge)
17-210 kPaD (20mm E-JUST red - white pawl)
17-210 kPaD (20mm E-JUST black or green - white pawl)
G=30-400 kPaD (20mm standard composite cartridge)
30-400 kPaD (20mm E-JUST red - grey pawl)
35-400 kPaD (20mm E-JUST black or green - grey pawl)
(Determine from cartridge selection chart)

Insert automatic flow limiting cartridge code:
0 if no cartridge required Y=grey R=red U=blue B=black G=green
(Determine from cartridge selection chart)

Insert cartridge dial setting/type:
1 to 8=dial setting on standard composite cartridge
0=standard pre-setting of 2 on standard composite cartridge
E=E-JUST cartridge
(Determine from cartridge selection chart)

Example: EVC.4.2.B.H.I.G.U.5=EVC 20mm ISO female threaded body with p/t plugs, 24V ON/OFF actuator, 15mm ISO male threaded union end inlet and a G-type blue standard composite cartridge - pre-setting 5.

Note 6: Flow rate, color and dial setting of cartridge are indicated on label affixed to body.

FLOW RATE SETTING - COMPOSITE CARTRIDGE - FOR VALVES DN15-DN25

20mm · 3/4" · composite cartridge · Y-type								
Pressure range, ΔP: 20-130 kPaD (15-130 kPaD)* · 2.9-18.9 psid (2.2-18.9 psid)*								
			Model no.	ABV1.Y.Y	ABV1.Y.R	ABV1.Y.U	ABV1.Y.B	ABV1.Y.G
Nominal flow rate	l/sec	l/hr	GPM	Grey*	Red	Blue	Black	Green
	0.0081	29.2	0.128	1				
	0.0133	47.9	0.211	2				
	0.0175	63.0	0.277	3				
	0.0222	79.9	0.352	4				
	0.0311	112	0.493	5				
	0.0353	127	0.560	6				
	0.0383	138	0.607	7				
	0.0431	155	0.683	8				
	0.0450	162	0.713				3	
	0.0575	207	0.911		4			
	0.0619	223	0.981			4		
	0.0669	241	1.06				4	
	0.0922	332	1.46		5			
	0.0978	352	1.55					1
	0.105	378	1.66		6			
	0.114	409	1.80		7			
	0.115	415	1.83			5		
	0.118	426	1.88					2
	0.119	430	1.89		8			
	0.136	489	2.15					3
	0.137	492	2.17			6		
	0.138	498	2.19					4
	0.146	524	2.31			7		
	0.146	526	2.32			8		
	0.155	557	2.45				5	
	0.176	635	2.80				6	
	0.180	647	2.85				7	
	0.193	695	3.06				8	
	0.231	830	3.66					5
	0.237	854	3.76					6
	0.253	909	4.00					7
	0.273	984	4.33					8

Accuracy: Greatest of either ±10% of controlled flow rate or 20 l/hr (0.0056 l/sec or 0.088 GPM).

20mm · 3/4" · composite cartridge · G-type								
Pressure range, ΔP: 40-400 kPaD (30-400 kPaD)* · 5.8-58 psid (4.4-58 psid)*								
			Model no.	ABV1.G.Y	ABV1.G.R	ABV1.G.U	ABV1.G.B	ABV1.G.G
Nominal flow rate	l/sec	l/hr	GPM	Grey*	Red	Blue	Black	Green
	0.0117	42.1	0.185	1				
	0.0189	68.0	0.300	2				
	0.0247	88.9	0.392	3				
	0.0325	117	0.515	4				
	0.0472	170	0.748	5				
	0.0528	190	0.837	6				
	0.0564	203	0.894			3		
	0.0597	215	0.946				3	
	0.0639	230	1.01	7				
	0.0694	250	1.10	8				
	0.0781	281	1.24		4			
	0.0908	327	1.44			4		
	0.0958	345	1.52				4	
	0.137	493	2.17		5			
	0.147	529	2.33					1
	0.161	581	2.56		6			
	0.173	624	2.75		7			
	0.181	652	2.87			5		
	0.181	653	2.88		8			
	0.186	670	2.95					2
	0.210	755	3.32					3
	0.216	779	3.43			6		
	0.218	785	3.46			7		
	0.220	792	3.49			8		
	0.237	853	3.75				5	
	0.241	869	3.83					4
	0.266	957	4.21				6	
	0.269	968	4.26				7	
	0.277	998	4.39				8	
	0.365	1320	5.79					5
	0.369	1330	5.85					6
	0.392	1410	6.21					7
	0.408	1470	6.46					8

Accuracy: Greatest of either ±10% of controlled flow rate or 20 l/hr (0.0056 l/sec or 0.088 GPM).

FLOW RATE SETTING - E-JUST CARTRIDGE - FOR VALVES DN15-DN25

20mm · 3/4" · E-JUST · Y-type · White pawl					
Pressure range, ΔP: 17-210 kPaD · 2.5-30 psid					
			Model no.	E-JUST1.Y.B	E-JUST1.Y.G
				Black	Green
	l/sec	l/hr	GPM	Setting	Setting
Nominal flow rate	0.0278	100	0.440	1.0	
	0.0299	108	0.475	1.1	
	0.0321	116	0.509	1.2	
	0.0343	123	0.543	1.3	
	0.0364	131	0.578	1.4	
	0.0386	139	0.612	1.5	
	0.0408	147	0.646	1.6	
	0.0429	155	0.681	1.7	
	0.0436	157	0.691		1.0
	0.0451	162	0.715	1.8	
	0.0468	168	0.741		1.1
	0.0473	170	0.749	1.9	
	0.0494	178	0.784	2.0	
	0.0499	180	0.791		1.2
	0.0516	186	0.818	2.1	
	0.0530	191	0.841		1.3
	0.0538	194	0.852	2.2	
	0.0559	201	0.887	2.3	
	0.0562	202	0.890		1.4
	0.0581	209	0.921	2.4	
	0.0593	214	0.940		1.5
	0.0603	217	0.955	2.5	
	0.0624	225	0.990	2.6	1.6
	0.0646	233	1.02	2.7	
	0.0656	236	1.04		1.7
	0.0668	240	1.06	2.8	
	0.0687	247	1.09		1.8
	0.0689	248	1.09	2.9	
	0.0711	256	1.13	3.0	
	0.0719	259	1.14		1.9
	0.0733	264	1.16	3.1	
	0.0750	270	1.19		2.0
	0.0754	272	1.20	3.2	
	0.0776	279	1.23	3.3	
	0.0781	281	1.24		2.1
	0.0798	287	1.26	3.4	
	0.0813	293	1.29		2.2
	0.0819	295	1.30	3.5	
	0.0841	303	1.33	3.6	
	0.0844	304	1.34		2.3
	0.0863	311	1.37	3.7	
	0.0876	315	1.39		2.4
	0.0884	318	1.40	3.8	

Continue next column...

20mm · 3/4" · E-JUST · Y-type · White pawl					
Pressure range, ΔP: 17-210 kPaD · 2.5-30 psid					
			Model no.	E-JUST1.Y.B	E-JUST1.Y.G
				Black	Green
	l/sec	l/hr	GPM	Setting	Setting
Nominal flow rate	0.0906	326	1.44	3.9	
	0.0907	327	1.44		2.5
	0.0928	334	1.47	4.0	
	0.0938	338	1.49		2.6
	0.0949	342	1.50	4.1	
	0.0970	349	1.54		2.7
	0.0971	350	1.54	4.2	
	0.0993	357	1.57	4.3	
	0.100	360	1.59		2.8
	0.101	365	1.61	4.4	
	0.103	372	1.64		2.9
	0.104	373	1.64	4.5	
	0.106	381	1.68	4.6	
	0.106	383	1.69		3.0
	0.108	389	1.71	4.7	
	0.110	394	1.74		3.1
	0.110	396	1.75	4.8	
	0.112	404	1.78	4.9	
	0.113	406	1.79		3.2
	0.114	412	1.81	5.0	
	0.116	417	1.84		3.3
	0.119	428	1.89		3.4
	0.122	440	1.94		3.5
	0.125	451	1.98		3.6
	0.128	462	2.03		3.7
	0.132	473	2.08		3.8
	0.135	485	2.13		3.9
	0.138	496	2.18		4.0
	0.141	507	2.23		4.1
	0.144	519	2.28		4.2
	0.147	530	2.33		4.3
	0.150	541	2.38		4.4
	0.153	553	2.43		4.5
	0.157	564	2.48		4.6
	0.160	575	2.53		4.7
	0.163	586	2.58		4.8
	0.166	598	2.63		4.9
	0.169	609	2.68		5.0

Accuracy: Greatest of
either ±5% of controlled flow rate
or ±2% of maximum flow rate

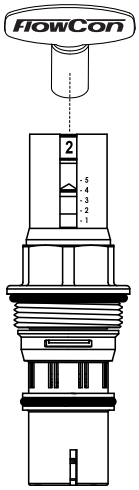

Use the FlowCon adjustment key (part number ACC0001) for adjusting the flow rate.

A setting of 4.2 corresponds to a flow rate of 0.144 l/sec for the 20mm green cartridge, range 17-210 kPaD.

FLOW RATE SETTING - E-JUST CARTRIDGE - FOR VALVES DN15-DN25 (continued)

20mm · 3/4" · E-JUST · Y-type · White pawl			
Pressure range. ΔP: 17-200 kPaD · 2.5-29 psid			
			Model no. E-JUST1.Y.R
			Red
Nominal flow rate l/sec	l/hr	GPM	Setting
0.0767	276	1.22	1.0
0.0813	293	1.29	1.1
0.0860	310	1.36	1.2
0.0907	326	1.44	1.3
0.0953	343	1.51	1.4
0.100	360	1.58	1.5
0.105	377	1.66	1.6
0.109	393	1.73	1.7
0.114	410	1.80	1.8
0.118	426	1.88	1.9
0.123	443	1.95	2.0
0.128	459	2.02	2.1
0.132	475	2.09	2.2
0.136	491	2.16	2.3
0.141	507	2.23	2.4
0.145	523	2.30	2.5
0.150	539	2.37	2.6
0.154	554	2.44	2.7
0.158	569	2.51	2.8
0.162	584	2.57	2.9
0.166	599	2.64	3.0
0.170	614	2.70	3.1
0.174	628	2.76	3.2
0.178	642	2.83	3.3
0.182	655	2.89	3.4
0.186	669	2.94	3.5
0.189	682	3.00	3.6
0.193	695	3.06	3.7
0.196	707	3.11	3.8
0.200	719	3.17	3.9
0.203	731	3.22	4.0
0.206	742	3.27	4.1
0.209	753	3.32	4.2
0.212	764	3.36	4.3
0.215	774	3.41	4.4
0.218	784	3.45	4.5
0.220	793	3.49	4.6
0.223	802	3.53	4.7
0.225	810	3.57	4.8
0.227	818	3.60	4.9
0.229	825	3.60	5.0

Accuracy: Greatest of
either ±5% of controlled flow rate
or ±2% of maximum flow rate

20mm · 3/4" · E-JUST · G-type · Grey pawl			
Pressure range. ΔP: 30-400 kPaD · 4.4-58 psid			
			Model no. E-JUST1.G.R
			Red
Nominal flow rate l/sec	l/hr	GPM	Setting
0.113	406	1.79	1.0
0.119	427	1.88	1.1
0.125	449	1.98	1.2
0.131	470	2.07	1.3
0.137	492	2.17	1.4
0.143	513	2.26	1.5
0.149	535	2.36	1.6
0.155	556	2.45	1.7
0.161	578	2.54	1.8
0.167	599	2.64	1.9
0.172	621	2.73	2.0
0.178	642	2.83	2.1
0.184	664	2.92	2.2
0.190	685	3.02	2.3
0.196	707	3.11	2.4
0.202	728	3.21	2.5
0.208	750	3.30	2.6
0.214	771	3.40	2.7
0.220	793	3.49	2.8
0.226	814	3.59	2.9
0.232	836	3.68	3.0
0.238	857	3.78	3.1
0.244	879	3.87	3.2
0.250	900	3.96	3.3
0.256	922	4.06	3.4
0.262	943	4.15	3.5
0.268	965	4.25	3.6
0.274	987	4.34	3.7
0.280	1010	4.44	3.8
0.286	1030	4.53	3.9
0.292	1050	4.63	4.0
0.298	1070	4.72	4.1
0.304	1090	4.82	4.2
0.310	1120	4.91	4.3
0.316	1140	5.01	4.4
0.322	1160	5.10	4.5
0.328	1180	5.20	4.6
0.334	1200	5.29	4.7
0.340	1220	5.38	4.8
0.346	1240	5.48	4.9
0.352	1270	5.57	5.0

Accuracy: Greatest of
either ±5% of controlled flow rate
or ±2% of maximum flow rate

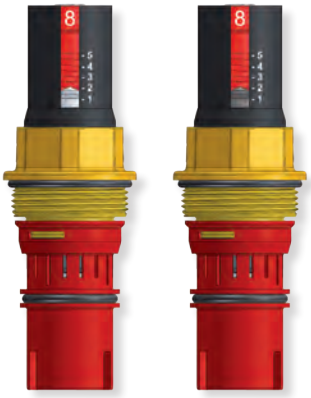

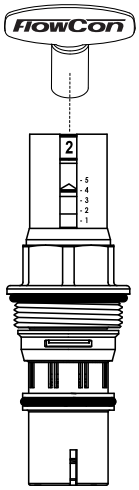

Use the FlowCon adjustment key (part number ACC0001) for adjusting the flow rate.

A setting of 4.2 corresponds to a flow rate of 0.304 l/sec for the 20mm red cartridge, range 30-400 kPaD.

FLOW RATE SETTING - E-JUST CARTRIDGE - FOR VALVES DN15-DN25 (continued)

20mm · 3/4" · E-JUST · G-type · Grey pawl					
Pressure range, ΔP: 35-400 kPaD · 5.1-58 psid					
			Model no.	E-JUST1.G.B	E-JUST1.G.G
				Black	Green
	l/sec	l/hr	GPM	Setting	Setting
Nominal flow rate	0.0383	138	0.607	1.0	
	0.0416	150	0.660	1.1	
	0.0449	162	0.712	1.2	
	0.0483	174	0.765	1.3	
	0.0516	186	0.817	1.4	
	0.0549	198	0.870	1.5	
	0.0582	210	0.922	1.6	
	0.0615	221	0.975	1.7	
	0.0648	233	1.03	1.8	
	0.0660	238	1.05		1.0
	0.0681	245	1.08	1.9	
	0.0706	254	1.12		1.1
	0.0714	257	1.13	2.0	
	0.0748	269	1.18	2.1	
	0.0751	271	1.19		1.2
	0.0781	281	1.24	2.2	
	0.0797	287	1.26		1.3
	0.0814	293	1.29	2.3	
	0.0843	304	1.34		1.4
	0.0847	305	1.34	2.4	
	0.0880	317	1.40	2.5	
	0.0889	320	1.41		1.5
	0.0913	329	1.45	2.6	
	0.0934	336	1.48		1.6
	0.0946	341	1.50	2.7	
	0.0979	353	1.55	2.8	
	0.0980	353	1.55		1.7
	0.101	365	1.61	2.9	
	0.103	369	1.63		1.8
	0.105	377	1.66	3.0	
	0.107	386	1.70		1.9
	0.108	388	1.71	3.1	
	0.111	400	1.76	3.2	
	0.112	402	1.77		2.0
	0.115	412	1.82	3.3	
	0.116	419	1.84		2.1
	0.118	424	1.87	3.4	
	0.121	435	1.92		2.2
	0.121	436	1.92	3.5	
	0.124	448	1.97	3.6	
	0.125	452	1.99		2.3
	0.128	460	2.03	3.7	
	0.130	468	2.06		2.4
	0.131	472	2.08	3.8	

Continue next column...

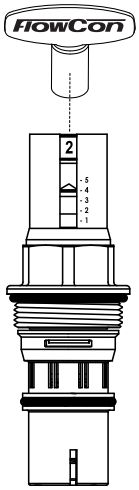

Use the FlowCon adjustment key (part number ACC0001) for adjusting the flow rate.

A setting of 4.2 corresponds to a flow rate of 0.212 l/sec for the 20mm green cartridge, range 35-400 kPaD.

20mm · 3/4" · E-JUST · G-type · Grey pawl					
Pressure range, ΔP: 35-400 kPaD · 5.1-58 psid					
			Model no.	E-JUST1.G.B	E-JUST1.G.G
				Black	Green
	l/sec	l/hr	GPM	Setting	Setting
Nominal flow rate	0.134	484	2.13	3.9	
	0.135	485	2.13		2.5
	0.138	496	2.18	4.0	
	0.139	501	2.21		2.6
	0.141	508	2.24	4.1	
	0.144	517	2.28		2.7
	0.144	520	2.29	4.2	
	0.148	532	2.34	4.3	
	0.148	534	2.35		2.8
	0.151	544	2.39	4.4	
	0.153	550	2.42		2.9
	0.154	556	2.45	4.5	
	0.157	567	2.50		3.0
	0.158	567	2.50	4.6	
	0.161	579	2.55	4.7	
	0.162	583	2.57		3.1
	0.164	591	2.60	4.8	
	0.167	600	2.64		3.2
	0.168	603	2.66	4.9	
	0.171	615	2.71	5.0	
	0.171	616	2.71		3.3
	0.176	633	2.79		3.4
	0.180	649	2.86		3.5
	0.185	666	2.93		3.6
	0.189	682	3.00		3.7
	0.194	699	3.08		3.8
	0.199	715	3.15		3.9
	0.203	731	3.22		4.0
	0.208	748	3.29		4.1
	0.212	764	3.37		4.2
	0.217	781	3.44		4.3
	0.221	797	3.51		4.4
	0.226	814	3.58		4.5
	0.231	830	3.66		4.6
	0.235	847	3.73		4.7
	0.240	863	3.80		4.8
	0.244	880	3.87		4.9
	0.249	896	3.95		5.0

Accuracy: Greatest of
either ±5% of controlled flow rate
or ±2% of maximum flow rate

ACCESSORIES

- P/t plugs: 2 x ACC00101
- Blind cap: ACC0080 (cap without a cartridge for flushing out the system)
- Adjustment key: ACC0001 (key for adjusting the flow rate on E-JUST cartridges).

GENERAL DESCRIPTION

The standard actuators available for the FlowCon EVC valve are thermal actuators that operate ON/OFF on 24V AC/DC, 120V AC and 230V AC/DC or modulating on 24V AC respectively. ON/OFF actuators are available with end switches which can be used for controlling the fan in priority to the open position of the valve.

The EVC valves provide temperature control and dynamic balancing for use in cooling ceilings, fan coil units in air-condition or as zone valve in heating systems.

GENERAL SPECIFICATIONS

1. AUTOMATIC BALANCING AND TEMPERATURE CONTROL VALVES - FLOWCON EVC

1.1. Contractor shall install balancing / temperature valves where indicated in drawings.
1.2. The valve shall consist of dynamic, accessible, adjustable flow limiting device and integral thermal actuated two-way control valve.

2. VALVE ACTUATOR

2.1. Actuator shall provide a visual indication of the valve position.
2.2. The valve shall be closing when the actuator is not powered.
2.3. The valve shall withstand a shut off pressure of at least 400 kPa without allowing internal leakage.
2.4. The seat plug shall be manufactured of EPDM rubber.
2.5. The packing box for sealing the stem shall be removable with the system in operation, without allowing external leakage.

3. VALVE HOUSING

3.1. Valve housing shall consist of forged brass ASTM CuZn40Pb2, rated at no less than 1600 kPa static pressure and +120°C.
3.2. Valve housing shall be permanently marked to show direction of flow.
3.3. Valve housing shall be union end constructed with a range of pipe connections available for the appropriate pipe size.
3.4. Housing shall be configured for flow regulation unit accessibility.
3.5. Optional dual pressure/temperature test plugs for verifying accuracy of flow performance shall be available for all valve sizes.

4.a. FLOW REGULATOR / AUTOMATIC BALANCING UNIT / <u>COMPOSITE CARTRIDGE</u>

4.a.1. Flow regulation unit assembly shall be manufactured of polyoxymethylene with a hydrogenated acrylnitrile-butadiene rubber or EPDM diaphragm and stainless steel 18-8 spring.
4.a.2. Flow regulation unit shall be readily accessible for change-out or maintenance.
4.a.3. Flow regulation unit shall be adjustable to 1 of 8 different flow rates; shall be available in 2 different kPaD operational ranges; minimum range shall be capable of being activated by minimum 15 kPaD. Further, the flow regulation unit shall be capable of controlling the flow within ±10% of rated flow rate or 20l/hr.
4.a.4. Identification tags shall be available for all valves; tags shall be indelibly marked with flow rate, color and dial setting.

GENERAL SPECIFICATIONS (continued)

OR…

4.b. FLOW REGULATOR / AUTOMATIC BALANCING UNIT / <u>E-JUST CARTRIDGE</u>

4.b.1. Flow regulation unit assembly shall be manufactured of polysulfone with a hydrogenated acrylonitrile-butadiene rubber or EPDM diaphragm and stainless steel 18-8 spring.

4.b.2. Flow regulation unit shall be readily accessible for change-out or maintenance.

4.b.3. Flow regulation unit shall be adjustable with the valve in-line and the system i operation.

4.b.4. Flow regulation unit shall be externally adjustable to 1 of 41 different flow rates; shall be available in 4 different kPaD operational ranges for DN15/20/25; minimum range shall be capable of being activated by minimum 17 kPaD. Further, the flow regulation unit shall be capable of controlling flow within ±5% of rated flow or ±2% of maximum flow.

4.b.5. Identification tags shall be available for all valves; tags shall be indelibly marked with flow rate, color and dial setting.

APPLICATION AND SCHEMATIC EXAMPLE

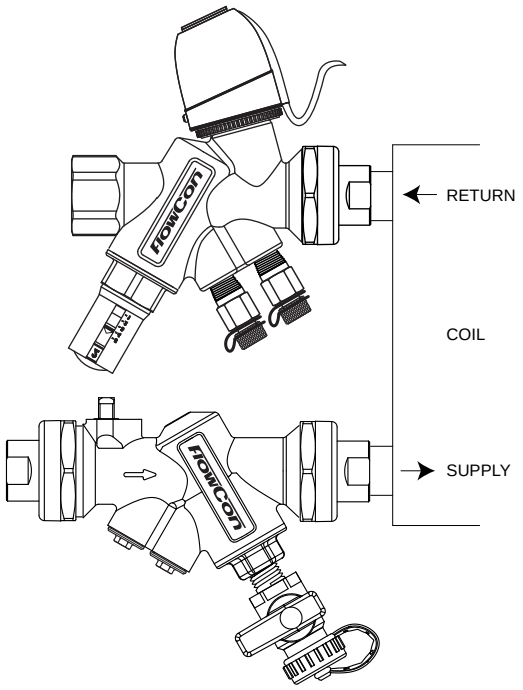

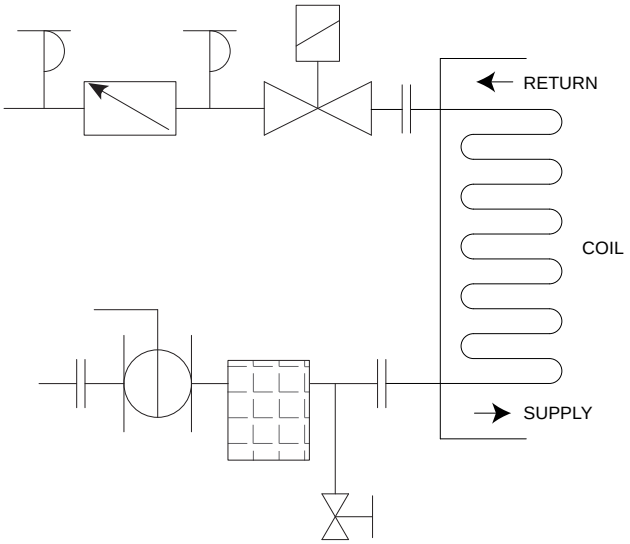

UPDATES

For latest updates please see www.flowcon.com

FlowCon ABM 15-40mm

Balanced Temperature Control Valve

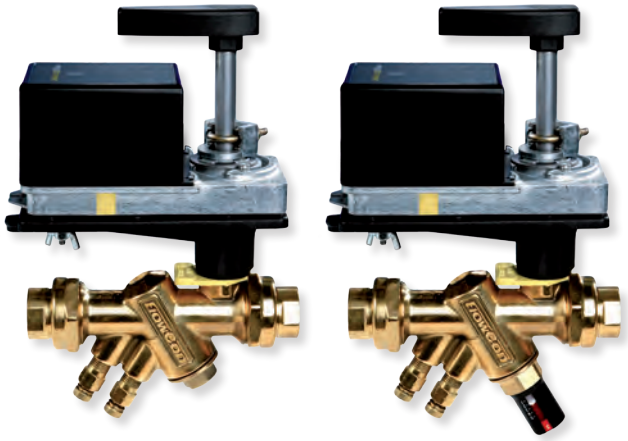

SPECIFICATIONS

Pressure rating:	2500 kPa / 360 psi
Temperature rating, media:	-20°C to +120°C / -4°F to +248°F
Temperature rating, ambient:	-20°C to +50°C / -4°F to +122°F
Materials:	
- Cartridge:	Composite cartridges: POM (Polyoxymethylene) E-JUST cartridges: PSU (Polysulfone)
- Diaphragm:	Hydrogenated acrylonitrile-butadiene-rubber or EPDM depending on type
- Body:	Forged brass ASTM CuZn40Pb2
- Ball valve:	Chemically nickel plated brass ball
- OPTIMIZER insert:	NORYL, glass filled polymer
- Ball seals:	Reinforced teflon (PTFE)
- Union end connection:	Brass alloy ISO or NPT
- Stem seals and o-rings:	EPDM
Body tappings:	1/4” ISO
Max. close off pressure:	700 kPa / 101.5 psi
Flow rate range:	0.0081-1.43 l/sec (standard composite cartridge) 0.0278-1.62 l/sec (E-JUST cartridge)

DIMENSIONS AND WEIGHTS (NOMINAL) (measured in mm unless noted)

Model no.	Valve size	Cartridge size	Optimizer®	Kvs[1] (m^3/hr)	L	H1	H2	H3	End connections C[2]			Weight (kgs.) w/o end conn.	Kv[3] (m^3/hr)
									ISO female	ISO male	Sweat		
ABM1	15	20	1	0.345	122	186	66	78	22	25	20	1.55	2.6
			3	1.121									
			5	3.190									
			6[4]	5.345									
	20		1	0.345					22	25	20		
			3	1.121									
			5	3.707									
			6[4]	6.379									
	25		1	0.259					N/A	39	22		
			3	1.121									
			5	3.276									
			6[4]	5.948									
ABM2	25	40	3	3.621	162	192	86	102	35	40	34	3.25	12.5
			4	6.121									
			1	9.052									
			2[4]	12.414									
	32		3	3.448					33	40	37		
			4	6.293									
			1	8.966									
			2[4]	12.586									
	40		3	3.448					33	42	N/A		
			4	6.293									
			1	8.793									
			2[4]	12.500									

Note 1: For ball and Optimizer® insert.
Note 2: Add end connection length to body length.
Note 3: For valve body.
Note 4: Ball without Optimizer® insert.

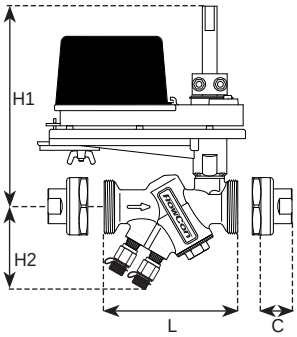

FlowCon ABM with composite cartridge

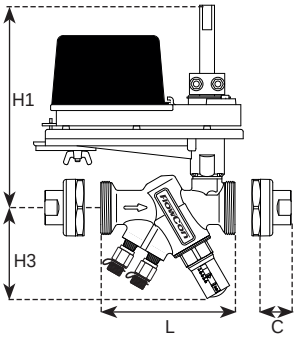

FlowCon ABM with E-JUST cartridge

MODEL NUMBER SELECTION[5]

ABM . ____ . ____ . ____ . ____ . ____ . ____ . ____ . ____ . ____ . ____ . ____

Insert body size:
1=ABM1 body (15/20/25mm) 2=ABM2 body (25/32/40mm)

Insert Optimizer® insert:
Insert 1, 2, 3, 4, 5 or 6
(Determine from dimension chart)

Insert p/t plug requirement:
0=taps open B=pressure temperature plugs P=taps plugged

Insert power supply, actuator:
0=if no actuator required
1=24V 2-position or 3-point floating (without end switches) (BBTS1000)
2=240V 2-position or 3-point floating (without end switches) (BBTHV1200A)
3=24V modulating (without end switches) (BBMS2000)
4=24V 2-position or 3-point floating incl. auxiliary switches (BBTS1021)
5=240V 2-position or 3-point floating incl. auxiliary switches (BBTHV1221A)
6=24V modulating incl. auxiliary switches (BBMS2021)

Insert inlet x outlet union end connections:

Body size	Female threaded	Male treaded	Sweat
Union end 15-20mm, 1/2”-1”	E=15mm=1/2” F=20mm=3/4”	H=15mm=1/2” I=20mm=3/4” J=25mm=1”	K=15mm L=18mm M=22mm
Union end 25-40mm, 1”-1 1/2”	G=25mm=1” P=32mm=1 1/4” Q=40mm=1 1/2”	J=25mm=1” S=32mm=1 1/4” T=40mm=1 1/2”	N=28mm W=35mm

Insert connection standard:
I=ISO N=NPT

Insert a kPaD control range:
0 if no cartridge required
Y=15-130 kPaD (20mm standard composite cartridge)
17-200 kPaD (20mm E-JUST red - white pawl)
17-210 kPaD (20mm E-JUST black or green - white pawl)
17-400 kPaD (40mm E-JUST - white pawl)
G=30-400 kPaD (20mm standard composite cartridge)
30-400 kPaD (20mm E-JUST red - grey pawl)
35-400 kPaD (20mm E-JUST black or green - grey pawl)
X=15-130 kPaD (40mm standard composite cartridge)
C=22-300 kPaD (40mm standard composite cartridge)
D=30-410 kPaD (40mm standard composite cartridge)
(Determine from cartridge selection chart)

Insert automatic flow limiting cartridge code:
0 if no cartridge required Y=grey R=red U=blue B=black G=green W=white
(Determine from cartridge selection chart)

Insert cartridge dial setting/type:
1 to 8=dial setting on standard composite cartridge
0=standard pre-setting of 2 on standard composite cartridge
E=E-JUST cartridge
(Determine from cartridge selection chart)

Example: ABM.1.1.B.1.E.E.I.Y.Y.0=ABM1-body with Optimizer® insert 1, p/t plugs and 24V actuator, 15mm ISO female threaded union connections and a Y-type grey standard composite cartridge - pre-setting 2.

Note 5: Flow rate, color and dial setting of cartridge are indicated on label affixed to body.

EQUAL PERCENTAGE CHARACTERISTIC

The Flow Optimizer® provies equal percentage control so that the heat output at the coil is linear when compared to the open area of the ball.

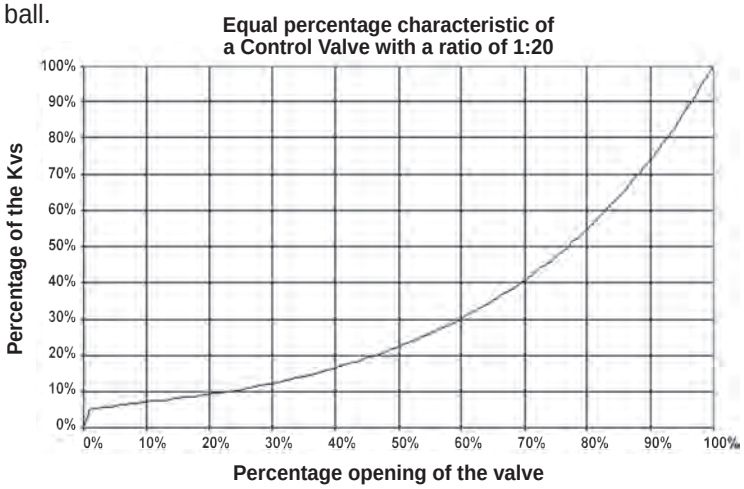

FLOW RATE SETTING - COMPOSITE CARTRIDGE - FOR VALVES DN15-DN25 SMALL

20mm · 3/4" · composite cartridge · Y-type								
Pressure range, ΔP: 20-130 kPaD (15-130 kPaD)* · 2.9-18.9 psid (2.2-18.9 psid)*								
			Model no.	ABV1.Y.Y	ABV1.Y.R	ABV1.Y.U	ABV1.Y.B	ABV1.Y.G
Nominal flow rate	l/sec	l/hr	GPM	Grey*	Red	Blue	Black	Green
	0.0081	29.2	0.128	1				
	0.0133	47.9	0.211	2				
	0.0175	63.0	0.277	3				
	0.0222	79.9	0.352	4				
	0.0311	112	0.493	5				
	0.0353	127	0.560	6				
	0.0383	138	0.607	7				
	0.0431	155	0.683	8				
	0.0450	162	0.713				3	
	0.0575	207	0.911		4			
	0.0619	223	0.981			4		
	0.0669	241	1.06				4	
	0.0922	332	1.46		5			
	0.0978	352	1.55					1
	0.105	378	1.66		6			
	0.114	409	1.80		7			
	0.115	415	1.83			5		
	0.118	426	1.88					2
	0.119	430	1.89		8			
	0.136	489	2.15					3
	0.137	492	2.17			6		
	0.138	498	2.19					4
	0.146	524	2.31			7		
	0.146	526	2.32			8		
	0.155	557	2.45				5	
	0.176	635	2.80				6	
	0.180	647	2.85				7	
	0.193	695	3.06				8	
	0.231	830	3.66					5
	0.237	854	3.76					6
	0.253	909	4.00					7
	0.273	984	4.33					8

Accuracy: Greatest of either ±10% of controlled flow rate or 20 l/hr (0.0056 l/sec or 0.088 GPM).

20mm · 3/4" · composite cartridge · G-type								
Pressure range, ΔP: 40-400 kPaD (30-400 kPaD)* · 5.8-58 psid (4.4-58 psid)*								
			Model no.	ABV1.G.Y	ABV1.G.R	ABV1.G.U	ABV1.G.B	ABV1.G.G
Nominal flow rate	l/sec	l/hr	GPM	Grey*	Red	Blue	Black	Green
	0.0117	42.1	0.185	1				
	0.0189	68.0	0.300	2				
	0.0247	88.9	0.392	3				
	0.0325	117	0.515	4				
	0.0472	170	0.748	5				
	0.0528	190	0.837	6				
	0.0564	203	0.894			3		
	0.0597	215	0.946				3	
	0.0639	230	1.01	7				
	0.0694	250	1.10	8				
	0.0781	281	1.24		4			
	0.0908	327	1.44			4		
	0.0958	345	1.52				4	
	0.137	493	2.17		5			
	0.147	529	2.33					1
	0.161	581	2.56		6			
	0.173	624	2.75		7			
	0.181	652	2.87			5		
	0.181	653	2.88		8			
	0.186	670	2.95					2
	0.210	755	3.32					3
	0.216	779	3.43			6		
	0.218	785	3.46			7		
	0.220	792	3.49			8		
	0.237	853	3.75				5	
	0.241	869	3.83					4
	0.266	957	4.21				6	
	0.269	968	4.26				7	
	0.277	998	4.39				8	
	0.365	1320	5.79					5
	0.369	1330	5.85					6
	0.392	1410	6.21					7
	0.408	1470	6.46					8

Accuracy: Greatest of either ±10% of controlled flow rate or 20 l/hr (0.0056 l/sec or 0.088 GPM).

FLOW RATE SETTING - COMPOSITE CARTRIDGE - FOR VALVES DN25 LARGE-DN40

40mm · 1 1/2" · composite cartridge · X-type					
Pressure range, ΔP: 15-130 kPaD · 2.2-18.9 psid					
			Model no.	ABV2.X.W	ABV2.X.R
Nominal flow rate	l/sec	l/hr	GPM	White	Red
	0.17	612	2.69	1	
	0.23	828	3.64	2	
	0.26	936	4.12		1
	0.33	1190	5.23	3	
	0.38	1370	6.02	4	
	0.39	1400	6.18		2
	0.48	1730	7.61	5	3
	0.54	1940	8.56	6	
	0.62	2230	9.83	7	
	0.63	2270	9.99		4
	0.66	2380	10.5	8	
	0.67	2410	10.6		5
	0.76	2740	12.0		6
	0.85	3060	13.5		7

Accuracy: Greatest of either ±10% of controlled flow rate or 20 l/hr (0.0056 l/sec or 0.088 GPM).

40mm · 1 1/2" · composite cartridge · C-type					
Pressure range. ΔP: 22-300 kPaD · 3.2-43.5 psid					
			Model no.	ABV2.C.W	ABV2.C.R
Nominal flow rate	l/sec	l/hr	GPM	White	Red
	0.23	828	3.65	1	
	0.31	1120	4.91	2	
	0.38	1370	6.02		1
	0.42	1510	6.66	3	
	0.47	1690	7.45	4	
	0.50	1800	7.93		2
	0.60	2160	9.51	5	
	0.64	2300	10.1		3
	0.68	2450	10.8	6	
	0.78	2810	12.4	7	
	0.83	2990	13.2		4
	0.84	3020	13.3	8	
	0.90	3240	14.3		5
	1.07	3850	17.0		6
	1.17	4210	18.5		7
	1.21	4360	19.2		8

Accuracy: Greatest of either ±10% of controlled flow rate or 20 l/hr (0.0056 l/sec or 0.088 GPM).

40mm · 1 1/2" · composite cartridge · D-type					
Pressure range. ΔP: 30-410 kPaD · 4.4-59.5 psid					
			Model no.	ABV2.D.W	ABV2.D.R
Nominal flow rate	l/sec	l/hr	GPM	White	Red
	0.27	972	4.28	1	
	0.36	1300	5.71	2	
	0.44	1580	6.97		1
	0.52	1870	8.24	3	
	0.58	2090	9.19	4	
	0.60	2160	9.51		2
	0.74	2660	11.7	5	
	0.76	2740	12.0		3
	0.83	2990	13.2	6	
	0.93	3350	14.7	7	
	0.99	3560	15.7	8	4
	1.07	3850	17.0		5
	1.28	4610	20.3		6
	1.39	5000	22.0		7
	1.43	5150	22.7		8

Accuracy: Greatest of either ±10% of controlled flow rate or 20 l/hr (0.0056 l/sec or 0.088 GPM).

FLOW RATE SETTING - E-JUST CARTRIDGE - FOR VALVES DN15-DN25 SMALL

20mm · 3/4" · E-JUST · Y-type · White pawl					
Pressure range, ΔP: 17-210 kPaD · 2.5-30 psid					
			Model no.	E-JUST1.Y.B	E-JUST1.Y.G
				Black	Green
	l/sec	l/hr	GPM	Setting	Setting
Nominal flow rate	0.0278	100	0.440	1.0	
	0.0299	108	0.475	1.1	
	0.0321	116	0.509	1.2	
	0.0343	123	0.543	1.3	
	0.0364	131	0.578	1.4	
	0.0386	139	0.612	1.5	
	0.0408	147	0.646	1.6	
	0.0429	155	0.681	1.7	
	0.0436	157	0.691		1.0
	0.0451	162	0.715	1.8	
	0.0468	168	0.741		1.1
	0.0473	170	0.749	1.9	
	0.0494	178	0.784	2.0	
	0.0499	180	0.791		1.2
	0.0516	186	0.818	2.1	
	0.0530	191	0.841		1.3
	0.0538	194	0.852	2.2	
	0.0559	201	0.887	2.3	
	0.0562	202	0.890		1.4
	0.0581	209	0.921	2.4	
	0.0593	214	0.940		1.5
	0.0603	217	0.955	2.5	
	0.0624	225	0.990	2.6	1.6
	0.0646	233	1.02	2.7	
	0.0656	236	1.04		1.7
	0.0668	240	1.06	2.8	
	0.0687	247	1.09		1.8
	0.0689	248	1.09	2.9	
	0.0711	256	1.13	3.0	
	0.0719	259	1.14		1.9
	0.0733	264	1.16	3.1	
	0.0750	270	1.19		2.0
	0.0754	272	1.20	3.2	
	0.0776	279	1.23	3.3	
	0.0781	281	1.24		2.1
	0.0798	287	1.26	3.4	
	0.0813	293	1.29		2.2
	0.0819	295	1.30	3.5	
	0.0841	303	1.33	3.6	
	0.0844	304	1.34		2.3
	0.0863	311	1.37	3.7	
	0.0876	315	1.39		2.4
	0.0884	318	1.40	3.8	

Continue next column...

20mm · 3/4" · E-JUST · Y-type · White pawl					
Pressure range, ΔP: 17-210 kPaD · 2.5-30 psid					
			Model no.	E-JUST1.Y.B	E-JUST1.Y.G
				Black	Green
	l/sec	l/hr	GPM	Setting	Setting
Nominal flow rate	0.0906	326	1.44	3.9	
	0.0907	327	1.44		2.5
	0.0928	334	1.47	4.0	
	0.0938	338	1.49		2.6
	0.0949	342	1.50	4.1	
	0.0970	349	1.54		2.7
	0.0971	350	1.54	4.2	
	0.0993	357	1.57	4.3	
	0.100	360	1.59		2.8
	0.101	365	1.61	4.4	
	0.103	372	1.64		2.9
	0.104	373	1.64	4.5	
	0.106	381	1.68	4.6	
	0.106	383	1.69		3.0
	0.108	389	1.71	4.7	
	0.110	394	1.74		3.1
	0.110	396	1.75	4.8	
	0.112	404	1.78	4.9	
	0.113	406	1.79		3.2
	0.114	412	1.81	5.0	
	0.116	417	1.84		3.3
	0.119	428	1.89		3.4
	0.122	440	1.94		3.5
	0.125	451	1.98		3.6
	0.128	462	2.03		3.7
	0.132	473	2.08		3.8
	0.135	485	2.13		3.9
	0.138	496	2.18		4.0
	0.141	507	2.23		4.1
	0.144	519	2.28		4.2
	0.147	530	2.33		4.3
	0.150	541	2.38		4.4
	0.153	553	2.43		4.5
	0.157	564	2.48		4.6
	0.160	575	2.53		4.7
	0.163	586	2.58		4.8
	0.166	598	2.63		4.9
	0.169	609	2.68		5.0

Accuracy: Greatest of
either ±5% of controlled flow rate
or ±2% of maximum flow rate

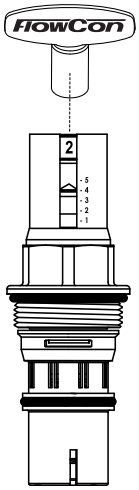

Use the FlowCon adjustment key (part number ACC0001) for adjusting the flow rate.

A setting of 4.2 corresponds to a flow rate of 0.144 l/sec for the 20mm green cartridge, range 17-210 kPaD.

FLOW RATE SETTING - E-JUST CARTRIDGE - FOR VALVES DN15-DN25 SMALL (continued)

20mm · 3/4" · E-JUST · Y-type · White pawl			
Pressure range. ΔP: 17-200 kPaD · 2.5-29 psid			
			Model no. E-JUST1.Y.R
			Red
Nominal flow rate l/sec	l/hr	GPM	Setting
0.0767	276	1.22	1.0
0.0813	293	1.29	1.1
0.0860	310	1.36	1.2
0.0907	326	1.44	1.3
0.0953	343	1.51	1.4
0.100	360	1.58	1.5
0.105	377	1.66	1.6
0.109	393	1.73	1.7
0.114	410	1.80	1.8
0.118	426	1.88	1.9
0.123	443	1.95	2.0
0.128	459	2.02	2.1
0.132	475	2.09	2.2
0.136	491	2.16	2.3
0.141	507	2.23	2.4
0.145	523	2.30	2.5
0.150	539	2.37	2.6
0.154	554	2.44	2.7
0.158	569	2.51	2.8
0.162	584	2.57	2.9
0.166	599	2.64	3.0
0.170	614	2.70	3.1
0.174	628	2.76	3.2
0.178	642	2.83	3.3
0.182	655	2.89	3.4
0.186	669	2.94	3.5
0.189	682	3.00	3.6
0.193	695	3.06	3.7
0.196	707	3.11	3.8
0.200	719	3.17	3.9
0.203	731	3.22	4.0
0.206	742	3.27	4.1
0.209	753	3.32	4.2
0.212	764	3.36	4.3
0.215	774	3.41	4.4
0.218	784	3.45	4.5
0.220	793	3.49	4.6
0.223	802	3.53	4.7
0.225	810	3.57	4.8
0.227	818	3.60	4.9
0.229	825	3.60	5.0

Accuracy: Greatest of either ±5% of controlled flow rate or ±2% of maximum flow rate

20mm · 3/4" · E-JUST · G-type · Grey pawl			
Pressure range. ΔP: 30-400 kPaD · 4.4-58 psid			
			Model no. E-JUST1.G.R
			Red
Nominal flow rate l/sec	l/hr	GPM	Setting
0.113	406	1.79	1.0
0.119	427	1.88	1.1
0.125	449	1.98	1.2
0.131	470	2.07	1.3
0.137	492	2.17	1.4
0.143	513	2.26	1.5
0.149	535	2.36	1.6
0.155	556	2.45	1.7
0.161	578	2.54	1.8
0.167	599	2.64	1.9
0.172	621	2.73	2.0
0.178	642	2.83	2.1
0.184	664	2.92	2.2
0.190	685	3.02	2.3
0.196	707	3.11	2.4
0.202	728	3.21	2.5
0.208	750	3.30	2.6
0.214	771	3.40	2.7
0.220	793	3.49	2.8
0.226	814	3.59	2.9
0.232	836	3.68	3.0
0.238	857	3.78	3.1
0.244	879	3.87	3.2
0.250	900	3.96	3.3
0.256	922	4.06	3.4
0.262	943	4.15	3.5
0.268	965	4.25	3.6
0.274	987	4.34	3.7
0.280	1010	4.44	3.8
0.286	1030	4.53	3.9
0.292	1050	4.63	4.0
0.298	1070	4.72	4.1
0.304	1090	4.82	4.2
0.310	1120	4.91	4.3
0.316	1140	5.01	4.4
0.322	1160	5.10	4.5
0.328	1180	5.20	4.6
0.334	1200	5.29	4.7
0.340	1220	5.38	4.8
0.346	1240	5.48	4.9
0.352	1270	5.57	5.0

Accuracy: Greatest of either ±5% of controlled flow rate or ±2% of maximum flow rate

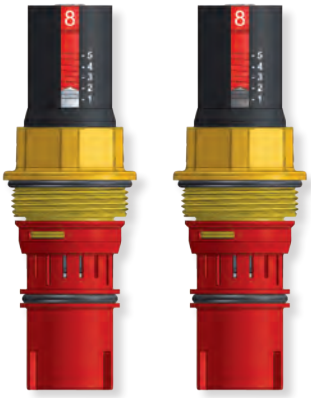

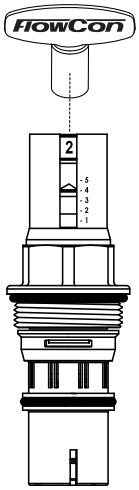

Use the FlowCon adjustment key (part number ACC0001) for adjusting the flow rate.

A setting of 4.2 corresponds to a flow rate of 0.304 l/sec for the 20mm red cartridge, range 30-400 kPaD.

FLOW RATE SETTING - E-JUST CARTRIDGE - FOR VALVES DN15-DN25 SMALL (continued)

20mm · 3/4" · E-JUST · G-type · Grey pawl					
Pressure range, ΔP: 35-400 kPaD · 5.1-58 psid					
			Model no.	E-JUST1.G.B	E-JUST1.G.G
				Black	Green
	l/sec	l/hr	GPM	Setting	Setting
Nominal flow rate	0.0383	138	0.607	1.0	
	0.0416	150	0.660	1.1	
	0.0449	162	0.712	1.2	
	0.0483	174	0.765	1.3	
	0.0516	186	0.817	1.4	
	0.0549	198	0.870	1.5	
	0.0582	210	0.922	1.6	
	0.0615	221	0.975	1.7	
	0.0648	233	1.03	1.8	
	0.0660	238	1.05		1.0
	0.0681	245	1.08	1.9	
	0.0706	254	1.12		1.1
	0.0714	257	1.13	2.0	
	0.0748	269	1.18	2.1	
	0.0751	271	1.19		1.2
	0.0781	281	1.24	2.2	
	0.0797	287	1.26		1.3
	0.0814	293	1.29	2.3	
	0.0843	304	1.34		1.4
	0.0847	305	1.34	2.4	
	0.0880	317	1.40	2.5	
	0.0889	320	1.41		1.5
	0.0913	329	1.45	2.6	
	0.0934	336	1.48		1.6
	0.0946	341	1.50	2.7	
	0.0979	353	1.55	2.8	
	0.0980	353	1.55		1.7
	0.101	365	1.61	2.9	
	0.103	369	1.63		1.8
	0.105	377	1.66	3.0	
	0.107	386	1.70		1.9
	0.108	388	1.71	3.1	
	0.111	400	1.76	3.2	
	0.112	402	1.77		2.0
	0.115	412	1.82	3.3	
	0.116	419	1.84		2.1
	0.118	424	1.87	3.4	
	0.121	435	1.92		2.2
	0.121	436	1.92	3.5	
	0.124	448	1.97	3.6	
	0.125	452	1.99		2.3
	0.128	460	2.03	3.7	
	0.130	468	2.06		2.4
	0.131	472	2.08	3.8	

Continue next column...

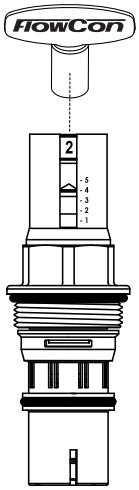

Use the FlowCon adjustment key (part number ACC0001) for adjusting the flow rate.

A setting of 4.2 corresponds to a flow rate of 0.212 l/sec for the 20mm green cartridge, range 35-400 kPaD.

20mm · 3/4" · E-JUST · G-type · Grey pawl					
Pressure range, ΔP: 35-400 kPaD · 5.1-58 psid					
			Model no.	E-JUST1.G.B	E-JUST1.G.G
				Black	Green
	l/sec	l/hr	GPM	Setting	Setting
Nominal flow rate	0.134	484	2.13	3.9	
	0.135	485	2.13		2.5
	0.138	496	2.18	4.0	
	0.139	501	2.21		2.6
	0.141	508	2.24	4.1	
	0.144	517	2.28		2.7
	0.144	520	2.29	4.2	
	0.148	532	2.34	4.3	
	0.148	534	2.35		2.8
	0.151	544	2.39	4.4	
	0.153	550	2.42		2.9
	0.154	556	2.45	4.5	
	0.157	567	2.50		3.0
	0.158	567	2.50	4.6	
	0.161	579	2.55	4.7	
	0.162	583	2.57		3.1
	0.164	591	2.60	4.8	
	0.167	600	2.64		3.2
	0.168	603	2.66	4.9	
	0.171	615	2.71	5.0	
	0.171	616	2.71		3.3
	0.176	633	2.79		3.4
	0.180	649	2.86		3.5
	0.185	666	2.93		3.6
	0.189	682	3.00		3.7
	0.194	699	3.08		3.8
	0.199	715	3.15		3.9
	0.203	731	3.22		4.0
	0.208	748	3.29		4.1
	0.212	764	3.37		4.2
	0.217	781	3.44		4.3
	0.221	797	3.51		4.4
	0.226	814	3.58		4.5
	0.231	830	3.66		4.6
	0.235	847	3.73		4.7
	0.240	863	3.80		4.8
	0.244	880	3.87		4.9
	0.249	896	3.95		5.0

Accuracy: Greatest of
either ±5% of controlled flow rate
or ±2% of maximum flow rate

FLOW RATE SETTING - E-JUST CARTRIDGE - FOR VALVES DN25 LARGE-DN40

40mm · 1 1/2" · E-JUST · Y-type · White pawl				
Pressure range. ΔP: 17-400 kPaD · 2.5-58 psid				
			Model no.	E-JUST2.Y.G
Nominal flow rate	l/sec	l/hr	GPM	Setting
	0.149	535	2.36	1.0
	0.220	793	3.49	1.1
	0.289	1040	4.58	1.2
	0.355	1280	5.63	1.3
	0.418	1510	6.63	1.4
	0.479	1730	7.60	1.5
	0.538	1940	8.52	1.6
	0.594	2140	9.41	1.7
	0.647	2330	10.3	1.8
	0.699	2520	11.1	1.9
	0.748	2690	11.9	2.0
	0.795	2860	12.6	2.1
	0.841	3030	13.3	2.2
	0.884	3180	14.0	2.3
	0.925	3330	14.7	2.4
	0.965	3470	15.3	2.5
	1.00	3610	15.9	2.6
	1.04	3740	16.5	2.7
	1.07	3870	17.0	2.8
	1.11	3990	17.6	2.9
	1.14	4100	18.1	3.0
	1.17	4220	18.6	3.1
	1.20	4320	19.0	3.2
	1.23	4420	19.5	3.3
	1.26	4520	19.9	3.4
	1.28	4620	20.3	3.5
	1.31	4710	20.7	3.6
	1.33	4800	21.1	3.7
	1.36	4890	21.5	3.8
	1.38	4970	21.9	3.9
	1.40	5050	22.3	4.0
	1.43	5130	22.6	4.1
	1.45	5210	23.0	4.2
	1.47	5290	23.3	4.3
	1.49	5370	23.6	4.4
	1.51	5440	24.0	4.5
	1.53	5520	24.3	4.6
	1.55	5600	24.6	4.7
	1.58	5670	25.0	4.8
	1.60	5750	25.3	4.9
	1.62	5830	25.7	5.0

Accuracy: Greatest of
either ±5% of controlled flow rate
or ±2% of maximum flow rate

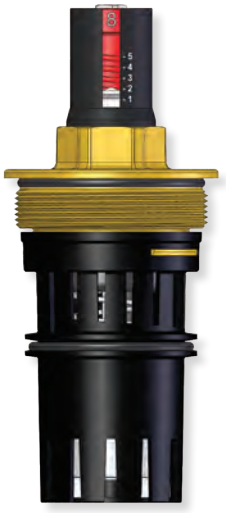

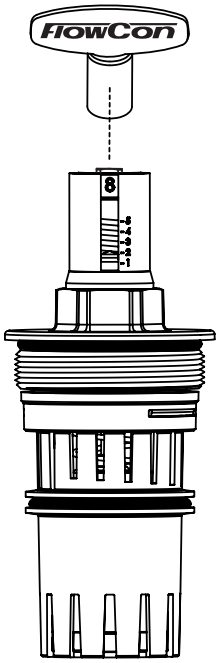

Use the FlowCon adjustment key (part number ACC0001) for adjusting the flow rate.

A setting of 4.2 corresponds to a flow rate of 1.45 l/sec for the 40mm cartridge, range 17-400 kPaD.

ACTUATOR SPECIFICATIONS[6]

Supply voltage:	24V:	22-26V AC / 28-32V DC
	240V:	220-250V AC 50/60Hz
	Modulating:	22-26V AC / 28-32V DC
Control signal:	2-position / 3-point-floating or modulating 2-10V DC / 4-20mA	
Max. power consumption:	24V:	6VA
	240V:	7 watts at 240V AC
	Modulating:	6VA
Electrical connection:	18 AWG (0.8mm^2) minimum	
Angle of rotation:	0°-90°, mechanically adjustable	
Torque at rated voltage:	5.6 Nm	
Direction of rotation:	Reversible	
Rotation time through 90°:	24V: 90-110 sec	
	240V: 20-30 sec, torque dependent	
	Modulating: 90-110 sec	
Auxiliary switches:	2 mechanical, fixed at 10° and 80° (only on types 4, 5 and 6)	
Auxiliary switch rating:	1 Amp resistive, 24V AC	
Housing material:	Electronic enclosure: flammability rating UL94-5V	
Gear train enclosure:	Die cast zinc with a steel base	
Ambient temperature:	-20°C to +50°C	
Humidity rating:	5 to 95% non condensing	
Protection:	IP22, NEMA type 2	
Weight:	1.4 kg	
Cable:	Actuators do not include length of cable. Actuators can be field wired up to 45 mtr.	

Note 6: FlowCon warranty is voided using other actuators than supplied or recommended by FlowCon International A/S.

ACTUATOR DESCRIPTION

The three standard actuators available for the FlowCon ABM valve are basic digital actuators that operate on 24V AC and 240V AC or a modulating version operating on 24V AC respectively. All models deliver a minimum of 5.6 Nm torque at rated voltage. The direction of rotation is reversible and the angle of rotation may be mechanically limited. Actuators are available with 2 mechanical auxiliary switches.

Note: Do not press clutch on actuator, when actuator is powered.

WIRING SCHEMATICS

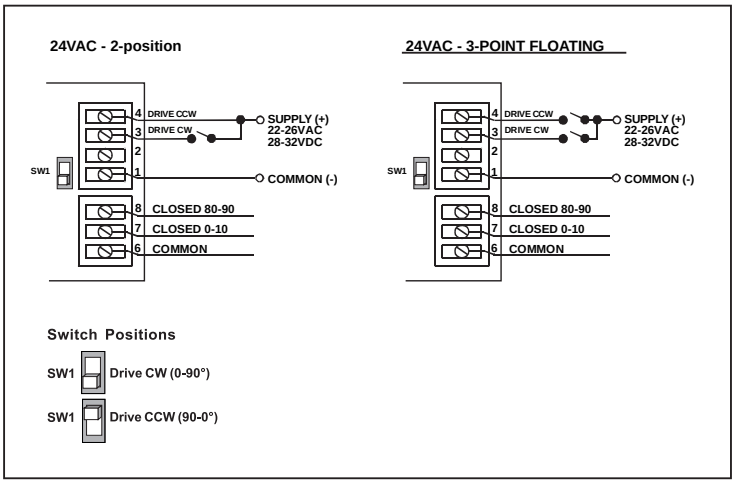

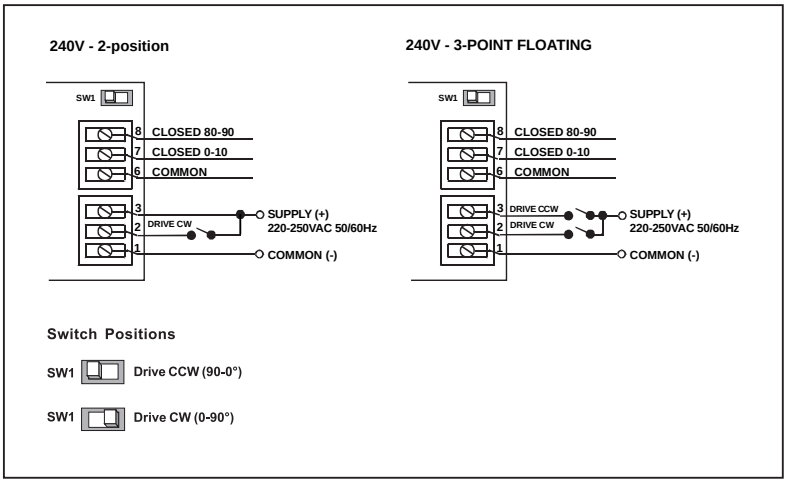

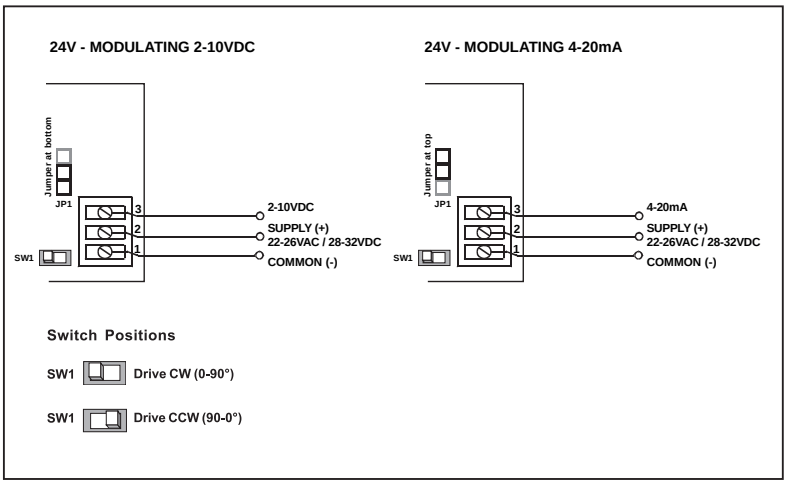

ACCESSORIES

- P/t plugs: 2 x ACC00101
- Blind cap: ACC0080 / ACC0081 (cap (small / medium) without a cartridge for flushing out the system)
- Adjustment key: ACC0001 (key for adjusting the flow rate on E-JUST cartridges and turning the ball valve).

GENERAL SPECIFICATIONS

1. AUTOMATIC BALANCING AND TEMPERATURE CONTROL VALVES - FLOWCON ABM

1.1. Contractor shall install balancing / temperature control valves where indicated in drawings.

1.2. Valve shall consist of dynamic, accessible, adjustable flow limiting device and integral electrically actuated two-way control valve.

2. VALVE ACTUATOR

2.1. Actuator housing shall be rated to IP22.

2.2. Actuator shall be driven by a 22-26V AC / 28-32V DC or 220-250V AC 50/60Hz motor and shall accept 2-10V DC, 4-20mA, 3-point-floating or 2-position electric signal depending on actuator selection.

2.3. Actuator shall have a power consumption not exceeding 6VA at 24V AC or 7 watts at 240V AC depending on actuator selection.

2.4. Actuator shall provide minimum torque required for full valve shut off position.

3. VALVE HOUSING AND ACTUATED BALL VALVE

3.1. Valve housing shall consist of forged brass ASTM CuZn40Pb2, rated at no less than 2500 kPa at +120°C.

3.2. Valve ball shall consist of chemically nickel plated brass (CuZn40Pb2). A range of inserts made of glass filled polymer providing equal percentage control shall be available from the manufacturer.

3.3. Each valve size shall be available with the choice of 4 unique Kvs values for the ball valve.

3.4. Valve housing shall be permanently marked to show direction of flow.

3.5. Valve housing shall be double union end constructed with a range of pipe connections available for the appropriate pipe size.

3.6. Optional dual pressure/temperature test plugs for verifying accuracy of flow performance shall be available for all valve sizes.

3.7. Housing shall be configured for flow regulation unit accessibility.

4.a. FLOW REGULATOR / AUTOMATIC BALANCING UNIT / <u>COMPOSITE CARTRIDGE</u>

4.a.1. Flow regulation unit assembly shall be manufactured of polyoxymethylene with a hydrogenated acrylonitrile-butadiene rubber or EPDM diaphragm and stainless steel 18-8 spring.

4.a.2. Flow regulation unit shall be readily accessible for change-out or maintenance.

4.a.3. Flow regulation unit shall be adjustable to 1 of 8 different flow rates; shall be available in 2 different kPaD operational ranges for DN15/20/25 and 3 different kPaD operational ranges for DN25/32/40; minimum range shall be capable of being activated by minimum 15 kPaD. Further, the flow regulation unit shall be capable of controlling flow within ±10% of rated flow rate or 20l/hr.

4.a.4. Identification tags shall be available for all valves; tags shall be indelibly marked with flow rate, color and dial setting.

OR….

4.b. FLOW REGULATOR / AUTOMATIC BALANCING UNIT / <u>E-JUST CARTRIDGE</u>

4.b.1. Flow regulation unit assembly shall be manufactured of polysulfone with a hydrogenated acrylonitrile-butadiene rubber or EPDM diaphragm and stainless steel 18-8 spring.

4.b.2. Flow regulation unit shall be readily accessible for change-out or maintenance.

4.b.3 Flow regulation unit shall be adjustable with the valve in-line and the system in operation.

4.b.4. Flow regulation unit shall be externally adjustable to 1 of 41 different flow rates; shall be available in 4 different kPaD operational ranges for DN15/20/25 and 1 kPaD operational range for DN25/32/40; minimum range shall be capable of being activated by minimum 17 kPaD. Further, the flow regulation unit shall be capable of controlling flow within ±5% of rated flow or ±2% of maximum flow.

4.b.5. Identification tags shall be available for all valves; tags shall be indelibly marked with flow rate, color and dial setting.

APPLICATION AND SCHEMATIC EXAMPLE

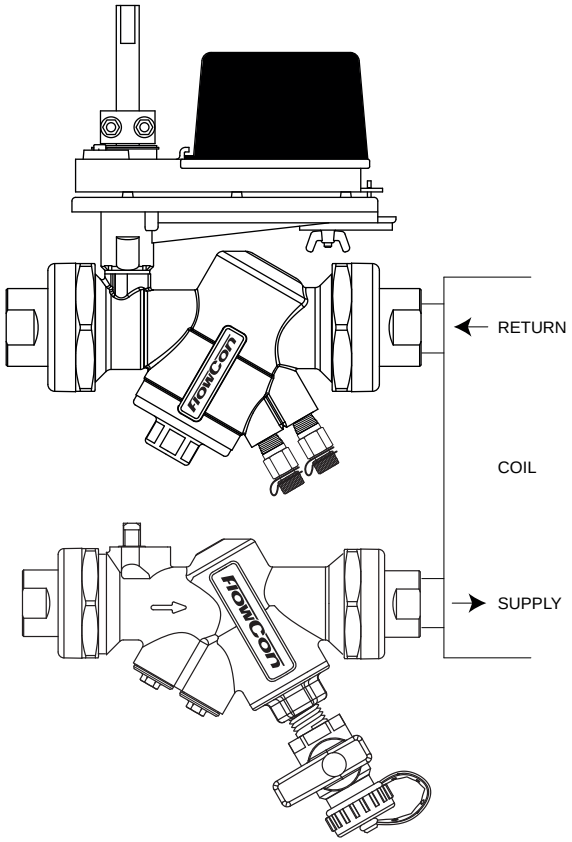

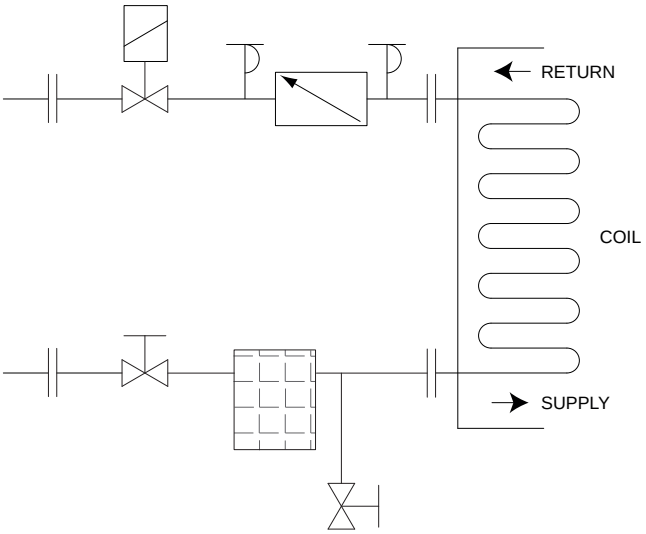

UPDATES

For latest updates please see www.flowcon.com

FlowCon International

FlowCon A / AB / ABV

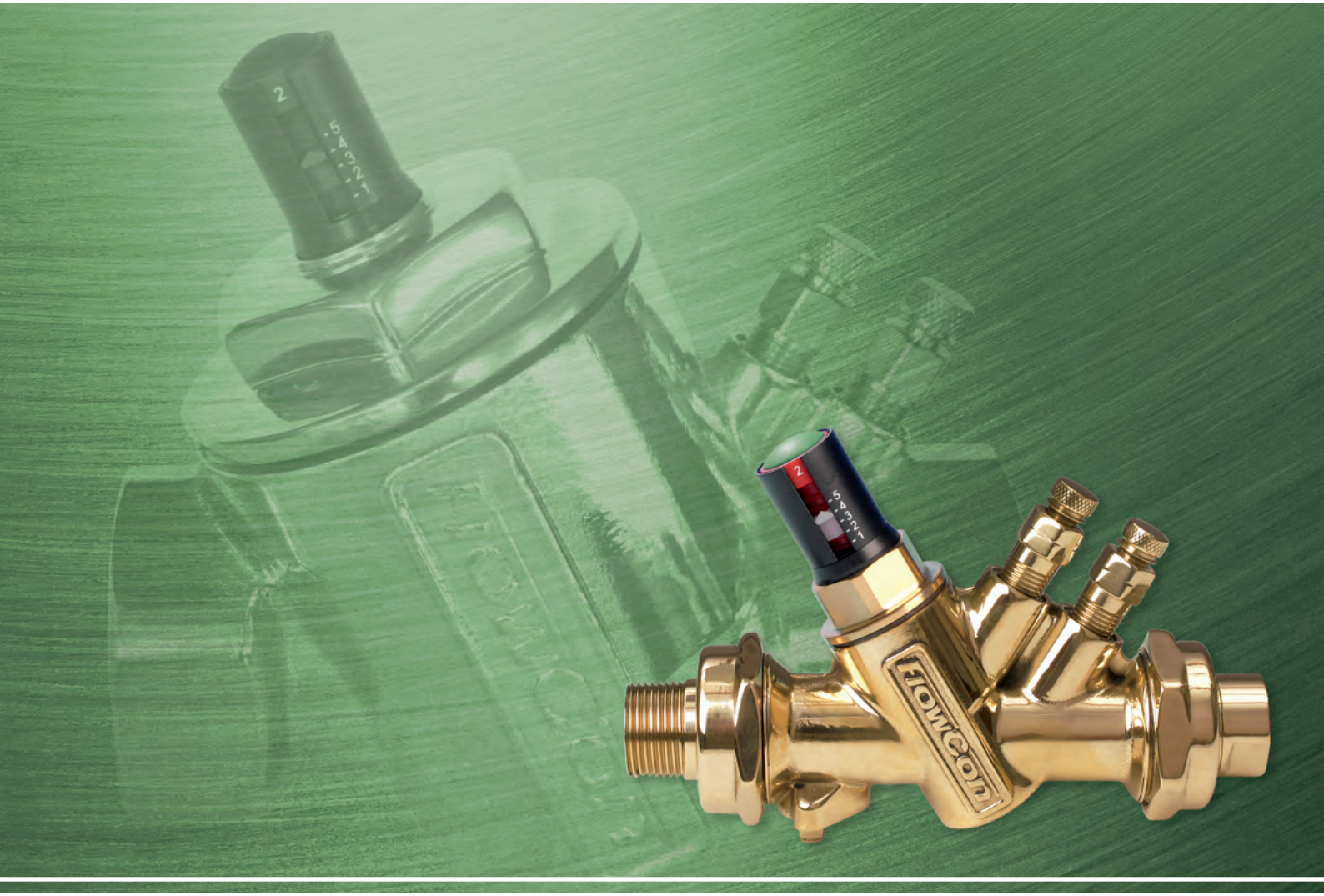

The “Adjustable” Automatic Flow Control Valves

FlowCon A, AB and ABV

Dynamic Balancing Valve with Adjustable Flow Cartridge

The FlowCon A, AB and ABV automatic balancing valves are designed for balancing heating and air-conditioning terminal units by providing a constant flow rate with the added feature of being adjustable.

With these automatic balancing valves flow can be controlled with one of two different cartridges; either an internal composite cartridge or an externally adjustable E-JUST cartridge. Both cartridge-types keep the flow rate constant, even with system pressure conditions changing.

The main difference between these and other automatic balancing valves is that each flow control cartridge can be easily adjusted to a new flow rate if necessary.

Standard Composite Cartridge

The standard composite cartridge is easily removed from the valve body and adjusted to one of eight different flow rates by means of an Hex key. There are 14 different adjustable cartridges, totalling nearly 100 different flow rates available for valve sizes 15mm through 40mm.

E-JUST Cartridge

The E-JUST cartridge can be externally adjusted to one of 41 flow rates even when the system is operating. The E-JUST cartridge is tamper-proof since adjustment is carried out by means of a special FlowCon key. Further the setting can be sealed with a top cover.

Stainless Steel Cartridge

Alternatively, a factory pre-set stainless steel cartridge can be used together with an adaptor. These cartridges are single flow cartridges, but exchanging of the cartridge and adaptor is straight forward.

Features and Benefits

- **Automatic balancing**, the correct flow rate for each circuit is achieved automatically.
- **Dynamic balancing**, the correct flow rate is maintained as each valve compensates for pressure fluctuations in the system.
- **Field adjustable**, flow rate can be changed on demand, either internally or externally adjustment or cartridge exchange.
- **Elimination of branch or ”partner” balancing valves** which results in fewer total valves used in each project.
- **Easily accessible cartridge** for flow rate adjustment or maintenance.
- **Accuracy** of ±10% or 20 l/hr (standard composite cartridge) alternatively ±5% of controlled flow rate or ±2% of maximum flow rate (E-JUST cartridge). For stainless steel cartridges accuracy is ±5%.
- **Built-in isolation ball valve** (FlowCon ABV).
- **Pressure/temperature measurement plugs** available for verifying operating differential pressure or checking ΔT across the coil (FlowCon AB/ABV).
- **Double union end connection** for ease of installation and wide selection of end fittings (FlowCon ABV) or **fixed female threaded ends** (FlowCon A/AB).

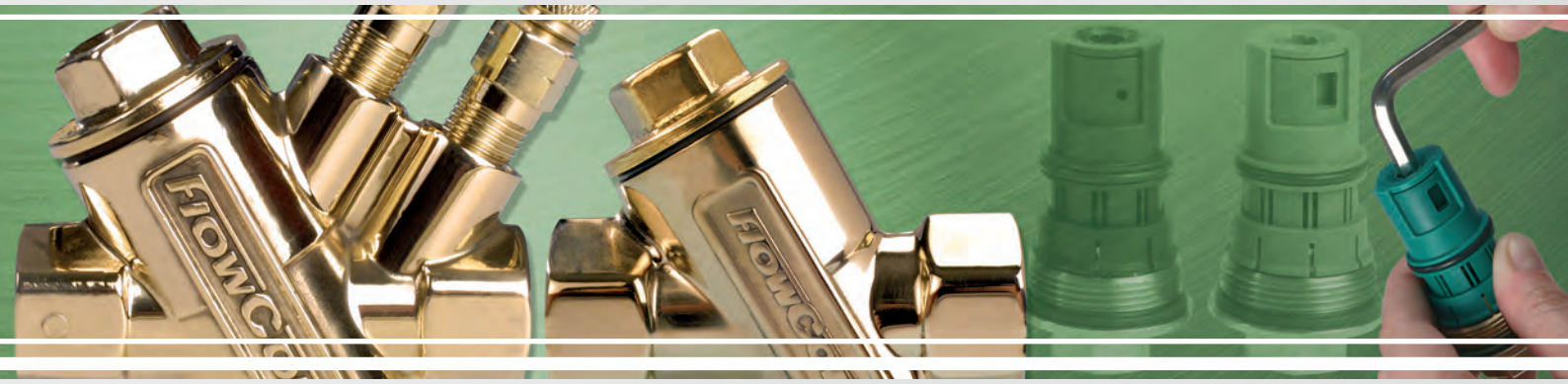

Principle of Cartridge Operation - FlowCon Composite and FlowCon E-JUST Cartridges

The flow control cartridge of FlowCon A/AB/ABV contains two interacting components; one that has an adjustable orifice, and one that regulates the pressure differential across the adjustable orifice.

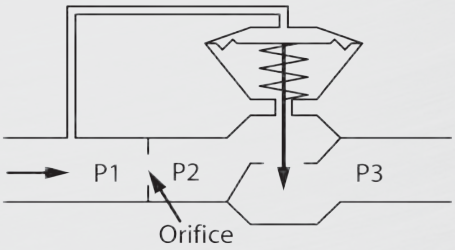

For the FlowCon A/AB/ABV, the principle of operation is shown above and the principle of construction is shown below. P1 and P3 are system pressures, P1÷P3 is the total pressure drop across the valve. P2 is set by the diaphragm acting in reaction to P1 in the upper diaphragm chamber. Interacting with the spring, P1÷P2 remains constant, keeping a constant ΔP across the orifice areas. The result is a constant flow rate through the valve, independent of pressure fluctuations.

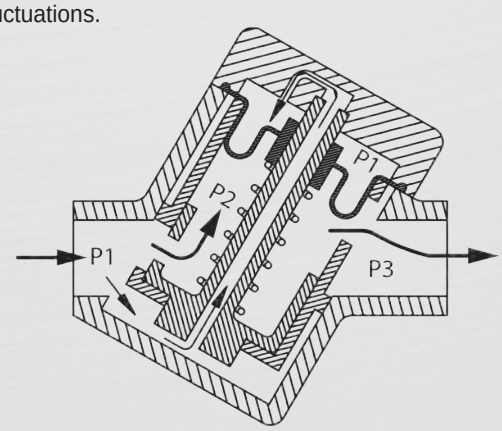

Below its pressure differential range, the valve acts as a fixed orifice. This allows a temperature control valve in the same circuit to operate with valve authority up to the set flow rate maximum.

In case the differential pressure is higher than the defined max. ΔP for the cartridge, the diaphragm may be damaged.

Principle of Cartridge Operation - Stainless Steel Cartridges

Below its pressure differential range the stainless steel cartridge acts as a fixed orifice. This allows a modulating valve in the same circuit to operate with valve authority up to the flow rate specified for the FlowCon A/AB/ABV.

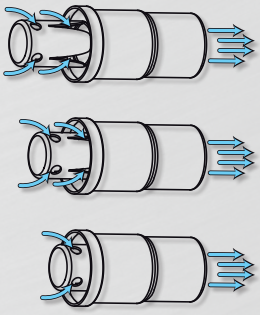

Within operating pressure differential range, the effective open orifice area of the cartridge is automatically adjusted to the point where the specified flow rate will be delivered (as the pressure differential increases, the open area closes and as it decreases, the area opens).

When the pressure differential range is exceeded, the valve again becomes a fixed orifice device. This ensures that no part of the system is starved or shut down.

Automatic vs. Manual System Layout Comparison

Manually balanced system.

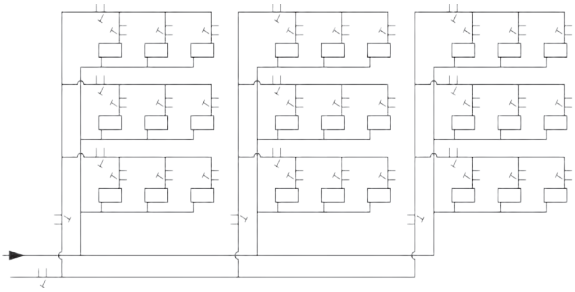

Total number of valves (manual) 40.

In addition to terminal unit valves, manual balancing requires ''partner valves'' located on the branches, raisers and main.

Automatic balanced system.

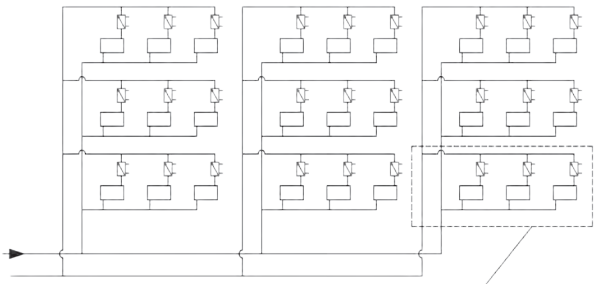

Total number of valves (automatic) 27.

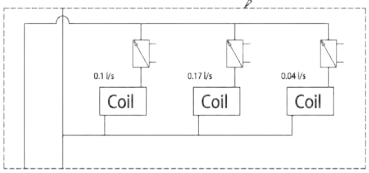

Each branch is automatically balanced due to the correct balance of each coil. Sum total of 0.31 l/sec (branch).

NOTE: The location of the FlowCon A/AB/ABV does not require lengths of pipe before or after the valve.

Technical Data

For further information and part number selection please see FlowCon tech note and the catalogue: FlowCon Inserts and Cartridges. For latest updates please see ***www.flowcon.com.***

		A/AB DN15/20/25 ABV DN15/20/25	AB DN25/32 ABV DN25/32/40	AB DN40/50
Static Pressure	(kPa)	2500		
	(psi)	360		
Temperature Rating (media/ambient)	(ºC)	-20 to +120 / 0 to +50		
	(ºF)	-4 to +248 / +32 to +122		
Pressure Drop Data		NOTE: For pump head calculations, add the minimum pressure differential for the index circuit to the other components pressure losses (i.e. valves, coil, etc.)		
Valve Body	(Kv-value)	2.6	12.5	23.0
	(Cv-value	3.0	14.5	30.4

Stainless Steel Cartridge		F3601xx	F3602xx	F3604xx	F3608xx	F3611xx	F3612xx	F3614xx	F3618xx	
Cartridge Size	(mm)	20	20	20	20	40	40	40	40	N/A
	(inch)	3/4"	3/4"	3/4"	3/4"	1 1/2"	1 1/2"	1 1/2"	1 1/2"	
Pressure Differential	(kPaD)	10-95	22-210	40-390	90-880	10-95	22-210	40-390	90-880	
	(psid)	1-14	2-32	4-57	8-128	1-14	2-32	4-57	8-128	
Flow Rate	(l/sec)	0.0210-0.315	0.0347-0.505	0.0473-0.631	0.0694-1.01	0.189-0.925	0.284-1.39	0.379-1.85	0.568-2.78	
	(GPM)	0.333-5.00	0.550-8.00	0.750-10.0	1.10-16.0	3.00-14.7	4.50-22.0	6.00-29.3	9.00-44.0	

Standard Composite Cartridge		ABV1.Y.x grey/red/blue/black/green	ABV1.G.x grey/red/blue/black/green	ABV2.X.x red/white	ABV2.C.x red/white	ABV2.D.x red/white	
Cartridge Size	(mm)	20	20	40	40	40	N/A
	(inch)	3/4"	3/4"	1 1/2"	1 1/2"	1 1/2"	
Pressure Differential	(kPaD)	15-130	30-400	15-130	22-300	30-410	
	(psid)	2.2-18.9	4.4-58	2.2-18.9	3.2-43.5	4.4-59.5	
Flow Rate	(l/sec)	0.0081-0.273	0.0117-0.408	0.17-0.85	0.23-1.21	0.27-1.43	
	(GPM)	0.128-4.33	0.185-6.46	2.69-13.5	3.65-19.2	4.28-22.7	

E-JUST Cartridge		E-JUST1.Y.x black/green	E-JUST1.Y.R red	E-JUST1.G.R red	E-JUST1.G.x black/green	E-JUST2.Y.G green	E-JUST3.G.B black
Cartridge Size	(mm)	20	20	20	20	40	50
	(inch)	3/4"	3/4"	3/4"	3/4"	1 1/2"	2"
Pressure Differential	(kPaD)	17-210	17-200	30-400	35-400	17-400	20-400
	(psid)	2.5-30	2.5-29	4.4-58	5.1-58	2.5-58	2.9-58
Flow Rate	(l/sec)	0.0278-0.169	0.0767-0.229	0.113-0.352	0.0383-0.249	0.149-1.62	0.883-4.48
	(GPM)	0.44-2.68	1.22-3.60	1.79-5.57	0.607-3.95	2.36-25.7	14.0-70.9

FlowCon A 15-25mm

Dynamic Balancing Valve - Adjustable Cartridge

SPECIFICATIONS

Pressure rating:	2500 kPa / 360 psi
Temperature rating, media:	-20°C to +120°C / -4°F to +248°F
Material:	
- Cartridge:	Composite cartridges: POM (Polyoxymethylene) E-JUST cartridges: PSU (Polysulfone)
- Diaphragm:	Hydrogenated acrylonitrile-butadiene-rubber or EPDM depending on type
- Body:	Forged brass ASTM CuZn40Pb2
- O-rings:	EPDM
End connections:	Fixed female ISO or NPT (DN25 is only available in ISO)
Flow rate range:	0.0081-0.408 l/sec (standard composite cartridge) 0.0278-0.352 l/sec (E-JUST cartridge)

DIMENSIONS AND WEIGHTS (NOMINAL) (measured in mm unless noted)

Valve size	Cartridge size	L	H1	H2	H3	Weight (kgs.)	Kv[1] (m^3/hr)
15	20	80	31	50	80	0.58	2.6
20						0.53	
25		91				0.56	

Note 1: For valve body.

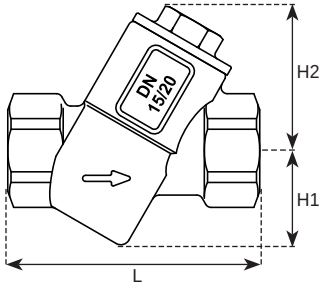

FlowCon A with composite cartridge

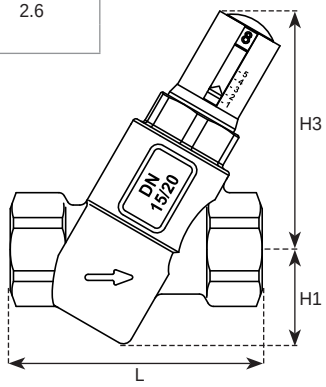

FlowCon A with E-JUST cartridge

MODEL NUMBER SELECTION[2]

A ____ . ____ . ____ . ____ . ____

Insert body size:
15=female threaded end 15mm 20=female threaded end 20mm 25=female threaded end 25mm

Insert connection standard:
I=ISO (15-20mm) I.K=ISO (25mm)

Insert a kPaD control range:
0 if no cartridge required
Y=15-130 kPaD (standard composite cartridge)
17-200 kPaD (E-JUST red - white pawl)
17-210 kPaD (E-JUST black or green - white pawl)
G=30-400 kPaD (standard composite cartridge)
30-400 kPaD (E-JUST red - grey pawl)
35-400 kPaD (E-JUST black or green - grey pawl)
(Determine from cartridge selection chart)

Insert automatic flow limiting cartridge code:
0 if no cartridge required Y=grey R=red U=blue B=black G=green
(Determine from cartridge selection chart)

Insert cartridge dial setting/type:
1 to 8=dial setting on standard composite cartridge
0=standard pre-setting of 2 on standard composite cartridge
E=E-JUST cartridge
(Determine from cartridge selection chart)

Example: A20.I.Y.Y.0=A 20mm ISO female threaded body with a Y-type grey standard composite cartridge - pre-setting 2.

Note 2: Flow rate, color and dial setting of cartridge are indicated on label affixed to body.

FLOW RATE SETTING - COMPOSITE CARTRIDGE - FOR VALVES DN15-DN25

20mm · 3/4" · composite cartridge · Y-type								
Pressure range, ΔP: 20-130 kPaD (15-130 kPaD)* · 2.9-18.9 psid (2.2-18.9 psid)*								
			Model no.	ABV1.Y.Y	ABV1.Y.R	ABV1.Y.U	ABV1.Y.B	ABV1.Y.G
Nominal flow rate	l/sec	l/hr	GPM	Grey*	Red	Blue	Black	Green
	0.0081	29.2	0.128	1				
	0.0133	47.9	0.211	2				
	0.0175	63.0	0.277	3				
	0.0222	79.9	0.352	4				
	0.0311	112	0.493	5				
	0.0353	127	0.560	6				
	0.0383	138	0.607	7				
	0.0431	155	0.683	8				
	0.0450	162	0.713				3	
	0.0575	207	0.911		4			
	0.0619	223	0.981			4		
	0.0669	241	1.06				4	
	0.0922	332	1.46		5			
	0.0978	352	1.55					1
	0.105	378	1.66		6			
	0.114	409	1.80		7			
	0.115	415	1.83			5		
	0.118	426	1.88					2
	0.119	430	1.89		8			
	0.136	489	2.15					3
	0.137	492	2.17			6		
	0.138	498	2.19					4
	0.146	524	2.31			7		
	0.146	526	2.32			8		
	0.155	557	2.45				5	
	0.176	635	2.80				6	
	0.180	647	2.85				7	
	0.193	695	3.06				8	
	0.231	830	3.66					5
	0.237	854	3.76					6
	0.253	909	4.00					7
	0.273	984	4.33					8

Accuracy: Greatest of either ±10% of controlled flow rate or 20 l/hr (0.0056 l/sec or 0.088 GPM).

20mm · 3/4" · composite cartridge · G-type								
Pressure range, ΔP: 40-400 kPaD (30-400 kPaD)* · 5.8-58 psid (4.4-58 psid)*								
			Model no.	ABV1.G.Y	ABV1.G.R	ABV1.G.U	ABV1.G.B	ABV1.G.G
Nominal flow rate	l/sec	l/hr	GPM	Grey*	Red	Blue	Black	Green
	0.0117	42.1	0.185	1				
	0.0189	68.0	0.300	2				
	0.0247	88.9	0.392	3				
	0.0325	117	0.515	4				
	0.0472	170	0.748	5				
	0.0528	190	0.837	6				
	0.0564	203	0.894			3		
	0.0597	215	0.946				3	
	0.0639	230	1.01	7				
	0.0694	250	1.10	8				
	0.0781	281	1.24		4			
	0.0908	327	1.44			4		
	0.0958	345	1.52				4	
	0.137	493	2.17		5			
	0.147	529	2.33					1
	0.161	581	2.56		6			
	0.173	624	2.75		7			
	0.181	652	2.87			5		
	0.181	653	2.88		8			
	0.186	670	2.95					2
	0.210	755	3.32					3
	0.216	779	3.43			6		
	0.218	785	3.46			7		
	0.220	792	3.49			8		
	0.237	853	3.75				5	
	0.241	869	3.83					4
	0.266	957	4.21				6	
	0.269	968	4.26				7	
	0.277	998	4.39				8	
	0.365	1320	5.79					5
	0.369	1330	5.85					6
	0.392	1410	6.21					7
	0.408	1470	6.46					8

Accuracy: Greatest of either ±10% of controlled flow rate or 20 l/hr (0.0056 l/sec or 0.088 GPM).

FLOW RATE SETTING - E-JUST CARTRIDGE - FOR VALVES DN15-DN25

20mm · 3/4" · E-JUST · Y-type · White pawl					
Pressure range, ΔP: 17-210 kPaD · 2.5-30 psid					
			Model no.	E-JUST1.Y.B	E-JUST1.Y.G
				Black	Green
	l/sec	l/hr	GPM	Setting	Setting
Nominal flow rate	0.0278	100	0.440	1.0	
	0.0299	108	0.475	1.1	
	0.0321	116	0.509	1.2	
	0.0343	123	0.543	1.3	
	0.0364	131	0.578	1.4	
	0.0386	139	0.612	1.5	
	0.0408	147	0.646	1.6	
	0.0429	155	0.681	1.7	
	0.0436	157	0.691		1.0
	0.0451	162	0.715	1.8	
	0.0468	168	0.741		1.1
	0.0473	170	0.749	1.9	
	0.0494	178	0.784	2.0	
	0.0499	180	0.791		1.2
	0.0516	186	0.818	2.1	
	0.0530	191	0.841		1.3
	0.0538	194	0.852	2.2	
	0.0559	201	0.887	2.3	
	0.0562	202	0.890		1.4
	0.0581	209	0.921	2.4	
	0.0593	214	0.940		1.5
	0.0603	217	0.955	2.5	
	0.0624	225	0.990	2.6	1.6
	0.0646	233	1.02	2.7	
	0.0656	236	1.04		1.7
	0.0668	240	1.06	2.8	
	0.0687	247	1.09		1.8
	0.0689	248	1.09	2.9	
	0.0711	256	1.13	3.0	
	0.0719	259	1.14		1.9
	0.0733	264	1.16	3.1	
	0.0750	270	1.19		2.0
	0.0754	272	1.20	3.2	
	0.0776	279	1.23	3.3	
	0.0781	281	1.24		2.1
	0.0798	287	1.26	3.4	
	0.0813	293	1.29		2.2
	0.0819	295	1.30	3.5	
	0.0841	303	1.33	3.6	
	0.0844	304	1.34		2.3
	0.0863	311	1.37	3.7	
	0.0876	315	1.39		2.4
	0.0884	318	1.40	3.8	

Continue next column...

20mm · 3/4" · E-JUST · Y-type · White pawl					
Pressure range, ΔP: 17-210 kPaD · 2.5-30 psid					
			Model no.	E-JUST1.Y.B	E-JUST1.Y.G
				Black	Green
	l/sec	l/hr	GPM	Setting	Setting
Nominal flow rate	0.0906	326	1.44	3.9	
	0.0907	327	1.44		2.5
	0.0928	334	1.47	4.0	
	0.0938	338	1.49		2.6
	0.0949	342	1.50	4.1	
	0.0970	349	1.54		2.7
	0.0971	350	1.54	4.2	
	0.0993	357	1.57	4.3	
	0.100	360	1.59		2.8
	0.101	365	1.61	4.4	
	0.103	372	1.64		2.9
	0.104	373	1.64	4.5	
	0.106	381	1.68	4.6	
	0.106	383	1.69		3.0
	0.108	389	1.71	4.7	
	0.110	394	1.74		3.1
	0.110	396	1.75	4.8	
	0.112	404	1.78	4.9	
	0.113	406	1.79		3.2
	0.114	412	1.81	5.0	
	0.116	417	1.84		3.3
	0.119	428	1.89		3.4
	0.122	440	1.94		3.5
	0.125	451	1.98		3.6
	0.128	462	2.03		3.7
	0.132	473	2.08		3.8
	0.135	485	2.13		3.9
	0.138	496	2.18		4.0
	0.141	507	2.23		4.1
	0.144	519	2.28		4.2
	0.147	530	2.33		4.3
	0.150	541	2.38		4.4
	0.153	553	2.43		4.5
	0.157	564	2.48		4.6
	0.160	575	2.53		4.7
	0.163	586	2.58		4.8
	0.166	598	2.63		4.9
	0.169	609	2.68		5.0

Accuracy: Greatest of
either ±5% of controlled flow rate
or ±2% of maximum flow rate

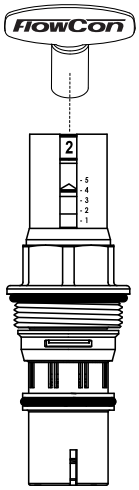

Use the FlowCon adjustment key (part number ACC0001) for adjusting the flow rate.

A setting of 4.2 corresponds to a flow rate of 0.144 l/sec for the 20mm green cartridge, range 17-210 kPaD.

FLOW RATE SETTING - E-JUST CARTRIDGE - FOR VALVES DN15-DN25 (continued)

20mm · 3/4" · E-JUST · Y-type · White pawl			
Pressure range. ΔP: 17-200 kPaD · 2.5-29 psid			
			Model no. E-JUST1.Y.R
Nominal flow rate			Red
l/sec	l/hr	GPM	Setting
0.0767	276	1.22	1.0
0.0813	293	1.29	1.1
0.0860	310	1.36	1.2
0.0907	326	1.44	1.3
0.0953	343	1.51	1.4
0.100	360	1.58	1.5
0.105	377	1.66	1.6
0.109	393	1.73	1.7
0.114	410	1.80	1.8
0.118	426	1.88	1.9
0.123	443	1.95	2.0
0.128	459	2.02	2.1
0.132	475	2.09	2.2
0.136	491	2.16	2.3
0.141	507	2.23	2.4
0.145	523	2.30	2.5
0.150	539	2.37	2.6
0.154	554	2.44	2.7
0.158	569	2.51	2.8
0.162	584	2.57	2.9
0.166	599	2.64	3.0
0.170	614	2.70	3.1
0.174	628	2.76	3.2
0.178	642	2.83	3.3
0.182	655	2.89	3.4
0.186	669	2.94	3.5
0.189	682	3.00	3.6
0.193	695	3.06	3.7
0.196	707	3.11	3.8
0.200	719	3.17	3.9
0.203	731	3.22	4.0
0.206	742	3.27	4.1
0.209	753	3.32	4.2
0.212	764	3.36	4.3
0.215	774	3.41	4.4
0.218	784	3.45	4.5
0.220	793	3.49	4.6
0.223	802	3.53	4.7
0.225	810	3.57	4.8
0.227	818	3.60	4.9
0.229	825	3.60	5.0

Accuracy: Greatest of
either ±5% of controlled flow rate
or ±2% of maximum flow rate

20mm · 3/4" · E-JUST · G-type · Grey pawl			
Pressure range. ΔP: 30-400 kPaD · 4.4-58 psid			
			Model no. E-JUST1.G.R
Nominal flow rate			Red
l/sec	l/hr	GPM	Setting
0.113	406	1.79	1.0
0.119	427	1.88	1.1
0.125	449	1.98	1.2
0.131	470	2.07	1.3
0.137	492	2.17	1.4
0.143	513	2.26	1.5
0.149	535	2.36	1.6
0.155	556	2.45	1.7
0.161	578	2.54	1.8
0.167	599	2.64	1.9
0.172	621	2.73	2.0
0.178	642	2.83	2.1
0.184	664	2.92	2.2
0.190	685	3.02	2.3
0.196	707	3.11	2.4
0.202	728	3.21	2.5
0.208	750	3.30	2.6
0.214	771	3.40	2.7
0.220	793	3.49	2.8
0.226	814	3.59	2.9
0.232	836	3.68	3.0
0.238	857	3.78	3.1
0.244	879	3.87	3.2
0.250	900	3.96	3.3
0.256	922	4.06	3.4
0.262	943	4.15	3.5
0.268	965	4.25	3.6
0.274	987	4.34	3.7
0.280	1010	4.44	3.8
0.286	1030	4.53	3.9
0.292	1050	4.63	4.0
0.298	1070	4.72	4.1
0.304	1090	4.82	4.2
0.310	1120	4.91	4.3
0.316	1140	5.01	4.4
0.322	1160	5.10	4.5
0.328	1180	5.20	4.6
0.334	1200	5.29	4.7
0.340	1220	5.38	4.8
0.346	1240	5.48	4.9
0.352	1270	5.57	5.0

Accuracy: Greatest of
either ±5% of controlled flow rate
or ±2% of maximum flow rate

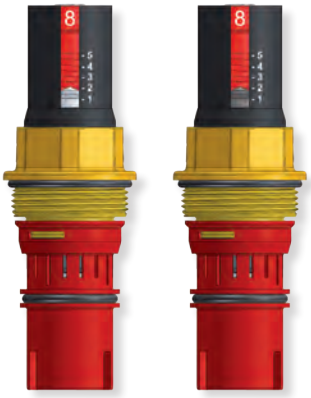

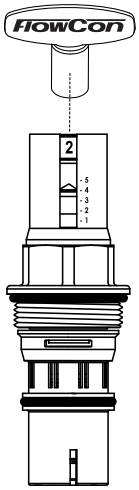

Use the FlowCon adjustment key (part number ACC0001) for adjusting the flow rate.

A setting of 4.2 corresponds to a flow rate of 0.304 l/sec for the 20mm red cartridge, range 30-400 kPaD.

FLOW RATE SETTING - E-JUST CARTRIDGE - FOR VALVES DN15-DN25 (continued)

20mm · 3/4" · E-JUST · G-type · Grey pawl					
Pressure range, ΔP: 35-400 kPaD · 5.1-58 psid					
			Model no.	E-JUST1.G.B	E-JUST1.G.G
				Black	Green
	l/sec	l/hr	GPM	Setting	Setting
Nominal flow rate	0.0383	138	0.607	1.0	
	0.0416	150	0.660	1.1	
	0.0449	162	0.712	1.2	
	0.0483	174	0.765	1.3	
	0.0516	186	0.817	1.4	
	0.0549	198	0.870	1.5	
	0.0582	210	0.922	1.6	
	0.0615	221	0.975	1.7	
	0.0648	233	1.03	1.8	
	0.0660	238	1.05		1.0
	0.0681	245	1.08	1.9	
	0.0706	254	1.12		1.1
	0.0714	257	1.13	2.0	
	0.0748	269	1.18	2.1	
	0.0751	271	1.19		1.2
	0.0781	281	1.24	2.2	
	0.0797	287	1.26		1.3
	0.0814	293	1.29	2.3	
	0.0843	304	1.34		1.4
	0.0847	305	1.34	2.4	
	0.0880	317	1.40	2.5	
	0.0889	320	1.41		1.5
	0.0913	329	1.45	2.6	
	0.0934	336	1.48		1.6
	0.0946	341	1.50	2.7	
	0.0979	353	1.55	2.8	
	0.0980	353	1.55		1.7
	0.101	365	1.61	2.9	
	0.103	369	1.63		1.8
	0.105	377	1.66	3.0	
	0.107	386	1.70		1.9
	0.108	388	1.71	3.1	
	0.111	400	1.76	3.2	
	0.112	402	1.77		2.0
	0.115	412	1.82	3.3	
	0.116	419	1.84		2.1
	0.118	424	1.87	3.4	
	0.121	435	1.92		2.2
	0.121	436	1.92	3.5	
	0.124	448	1.97	3.6	
	0.125	452	1.99		2.3
	0.128	460	2.03	3.7	
	0.130	468	2.06		2.4
	0.131	472	2.08	3.8	

Continue next column...

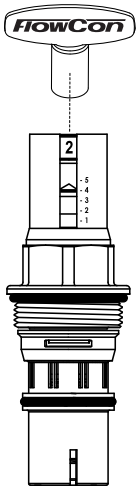

Use the FlowCon adjustment key (part number ACC0001) for adjusting the flow rate.

A setting of 4.2 corresponds to a flow rate of 0.212 l/sec for the 20mm green cartridge, range 35-400 kPaD.

20mm · 3/4" · E-JUST · G-type · Grey pawl					
Pressure range, ΔP: 35-400 kPaD · 5.1-58 psid					
			Model no.	E-JUST1.G.B	E-JUST1.G.G
				Black	Green
	l/sec	l/hr	GPM	Setting	Setting
Nominal flow rate	0.134	484	2.13	3.9	
	0.135	485	2.13		2.5
	0.138	496	2.18	4.0	
	0.139	501	2.21		2.6
	0.141	508	2.24	4.1	
	0.144	517	2.28		2.7
	0.144	520	2.29	4.2	
	0.148	532	2.34	4.3	
	0.148	534	2.35		2.8
	0.151	544	2.39	4.4	
	0.153	550	2.42		2.9
	0.154	556	2.45	4.5	
	0.157	567	2.50		3.0
	0.158	567	2.50	4.6	
	0.161	579	2.55	4.7	
	0.162	583	2.57		3.1
	0.164	591	2.60	4.8	
	0.167	600	2.64		3.2
	0.168	603	2.66	4.9	
	0.171	615	2.71	5.0	
	0.171	616	2.71		3.3
	0.176	633	2.79		3.4
	0.180	649	2.86		3.5
	0.185	666	2.93		3.6
	0.189	682	3.00		3.7
	0.194	699	3.08		3.8
	0.199	715	3.15		3.9
	0.203	731	3.22		4.0
	0.208	748	3.29		4.1
	0.212	764	3.37		4.2
	0.217	781	3.44		4.3
	0.221	797	3.51		4.4
	0.226	814	3.58		4.5
	0.231	830	3.66		4.6
	0.235	847	3.73		4.7
	0.240	863	3.80		4.8
	0.244	880	3.87		4.9
	0.249	896	3.95		5.0

Accuracy: Greatest of
either ±5% of controlled flow rate
or ±2% of maximum flow rate

ACCESSORIES

- Blind cap: ACC0080 (cap without a cartridge for flushing out the system)
- Adjustment key: ACC0001 (key for adjusting the flow rate on E-JUST cartridges).

GENERAL SPECIFICATIONS

1. AUTOMATIC BALANCING VALVES - FLOWCON A

1.1. Contractor shall install automatic balancing valves where indicated in drawings.
1.2. Valve shall consist of dynamic, accessible, adjustable flow limiting device.

2. VALVE HOUSING

2.1. Valve housing shall consist of forged brass ASTM CuZn40Pb2, rated at no less than 2500 kPa static pressure and +120°C.
2.2. Valve housing shall be permanently marked to show direction of flow.
2.3. Housing shall be configured for flow regulation unit accessibility.

3.a. FLOW REGULATOR / AUTOMATIC BALANCING UNIT / <u>COMPOSITE CARTRIDGE</u>

3.a.1. Flow regulation unit assembly shall be manufactured of polyoxymethylene with a hydrogenated acrylonitrile-butadiene rubber or EPDM diaphragm and stainless steel 18-8 spring.
3.a.2. Flow regulation unit shall be readily accessible for change-out or maintenance.
3.a.3. Flow regulation unit shall be adjustable to 1 of 8 different flow rates and shall be available in 2 different kPaD operational ranges; minimum range shall be capable of being activated by minimum 15 kPaD. Further, the flow regulation unit shall be capable of controlling the flow within ±10% of rated flow rate or 20l/hr.
3.a.4. Identification tags shall be available for all valves; tags shall be indelibly marked with flow rate, color and dial setting.

OR…

3.b. FLOW REGULATOR / AUTOMATIC BALANCING UNIT / <u>E-JUST CARTRIDGE</u>

3.b.1. Flow regulation unit assembly shall be manufactured of polysulfone with a hydrogenated acrylonitrile-butadiene rubber or EPDM diaphragm and stainless steel 18-8 spring.
3.b.2. Flow regulation unit shall be readily accessible for change-out or maintenance.
3.b.3. Flow regulation unit shall be adjustable with the valve in-line and the system in operation.
3.b.4. Flow regulation unit shall be externally adjustable to 1 of 41 different flow rates; shall be available in 4 different kPaD operational ranges for minimum range shall be capable of being activated by minimum 17 kPaD. Further, the flow regulation unit shall be capable of controlling flow within ±5% of rated flow or ±2% of maximum flow.
3.b.5. Identification tags shall be available for all valves; tags shall be indelibly marked with flow rate, color and dial setting.

APPLICATION AND SCHEMATIC EXAMPLE

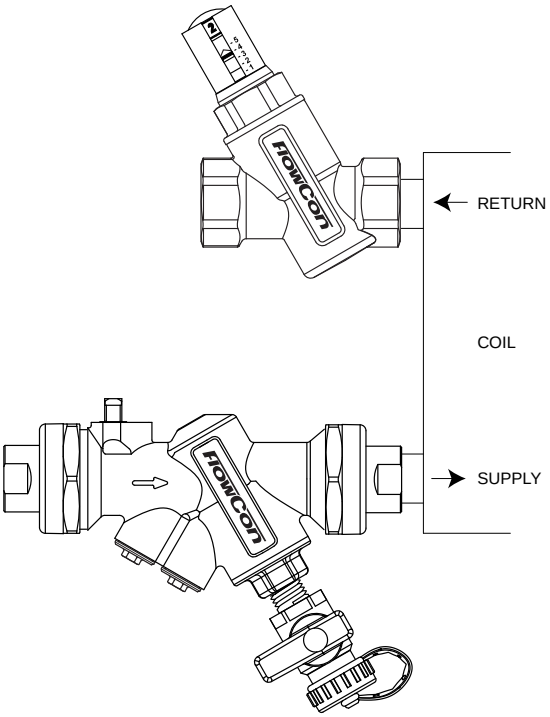

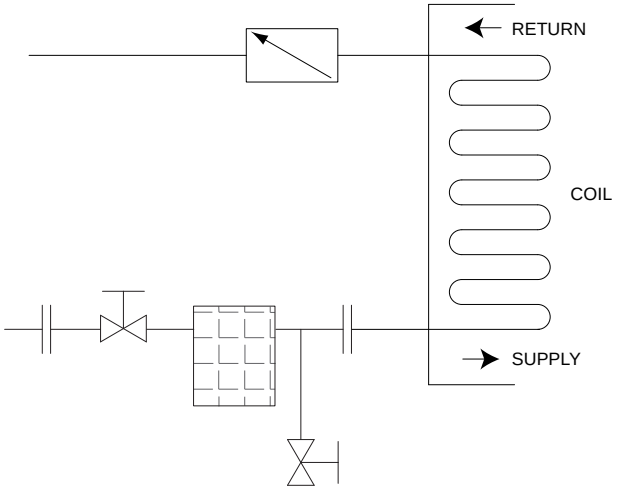

UPDATES

For latest updates please see www.flowcon.com

FlowCon AB 15-50mm

Dynamic Balancing Valve - Adjustable Cartridge

SPECIFICATIONS

Pressure rating:	2500 kPa / 360 psi
Temperature rating, media:	-20°C to +120°C / -4°F to +248°F
Material:	
- Cartridge:	Composite cartridges: POM (Polyoxymethylene) E-JUST cartridges: PSU (Polysulfone)
- Diaphragm:	Hydrogenated acrylonitrile-butadiene-rubber or EPDM depending on type
- Body:	Forged brass ASTM CuZn40Pb2
- O-rings:	EPDM
End connections:	Fixed female ISO or NPT
Body tappings:	1/4” ISO
Flow rate range:	0.0081-1.43 l/sec (standard composite cartridge) 0.0278-4.48 l/sec (E-JUST cartridge)

DIMENSIONS AND WEIGHTS (NOMINAL) (measured in mm unless noted)

Valve size	Cartridge size	L	H1	H2	H3	Weight (kgs.)	Kv[1] (m^3/hr)
15	20	82	66	31	78	0.51	2.6
20		94				0.56	
25		102				0.62	
25	40	128	83	47	99	2.00	12.5
32						1.80	
40	50	169	-	54.5	117	4.00	23.0
50						3.50	

Note 1: For valve body.

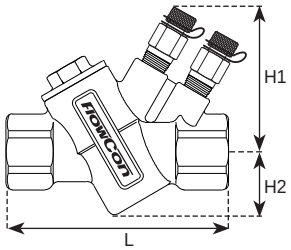

FlowCon AB with composite cartridge

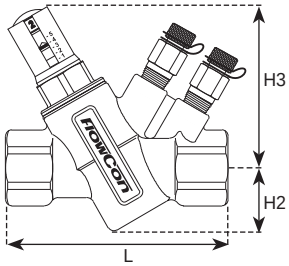

FlowCon AB with E-JUST cartridge

MODEL NUMBER SELECTION[2]

AB ____ . ____ . ____ . ____ . ____ . ____

Insert body size:
15=female threaded end 15mm 20=female threaded end 20mm 25=female threaded end 25mm
32=female threaded end 32mm 40=female threaded end 40mm 50=female threaded end 50mm

Leave it blank if taps open B=pressure temperature plugs P=taps plugged

Insert connection standard:
I=ISO, 15-50mm (except 25mm (20mm cartridge))
I.K=ISO, 25mm (20mm cartridge)
N=NPT, 15-50mm (except 25mm (20mm cartridge))
N.K=NPT, 25mm (20mm cartridge)

Insert a kPaD control range:
0 if no cartridge required
Y=15-130 kPaD (20mm standard composite cartridge)
17-200 kPaD (20mm E-JUST red - white pawl)
17-210 kPaD (20mm E-JUST black or green - white pawl)
17-400 kPaD (40mm E-JUST - white pawl)
G=20-400 kPaD (50mm E-JUST - grey pawl)
30-400 kPaD (20mm standard composite cartridge)
30-400 kPaD (20mm E-JUST red - grey pawl)
35-400 kPaD (20mm E-JUST black or green - grey pawl)
X=15-130 kPaD (40mm standard composite cartridge)
C=22-300 kPaD (40mm standard composite cartridge)
D=30-410 kPaD (40mm standard composite cartridge)
(Determine from cartridge selection chart)

Insert automatic flow limiting cartridge code:
0 if no cartridge required
Y=grey
R=red
U=blue
B=black (B=standard code for E-JUST 50mm)
G=green (G=standard code for E-JUST 40mm)
W=white
(Determine from cartridge selection chart)

Insert cartridge dial setting/type:
1 to 8=dial setting on standard composite cartridge
0=standard pre-setting of 2 on standard composite cartridge
E=E-JUST cartridge
(Determine from cartridge selection chart)

Example: AB20.B.I.Y.Y.0=AB 20mm ISO female threaded body with p/t plugs and a Y-type grey standard composite cartridge - pre-setting 2.

Note 2: Flow rate, color and dial setting of cartridge are indicated on label affixed to body.

FLOW RATE SETTING - COMPOSITE CARTRIDGE - FOR VALVES DN15-DN25 SMALL

20mm · 3/4" · composite cartridge · Y-type								
Pressure range, ΔP: 20-130 kPaD (15-130 kPaD)* · 2.9-18.9 psid (2.2-18.9 psid)*								
			Model no.	**ABV1.Y.Y**	**ABV1.Y.R**	**ABV1.Y.U**	**ABV1.Y.B**	**ABV1.Y.G**
Nominal flow rate	l/sec	l/hr	GPM	Grey*	Red	Blue	Black	Green
	0.0081	29.2	0.128	1				
	0.0133	47.9	0.211	2				
	0.0175	63.0	0.277	3				
	0.0222	79.9	0.352	4				
	0.0311	112	0.493	5				
	0.0353	127	0.560	6				
	0.0383	138	0.607	7				
	0.0431	155	0.683	8				
	0.0450	162	0.713				3	
	0.0575	207	0.911		4			
	0.0619	223	0.981			4		
	0.0669	241	1.06				4	
	0.0922	332	1.46		5			
	0.0978	352	1.55					1
	0.105	378	1.66		6			
	0.114	409	1.80		7			
	0.115	415	1.83			5		
	0.118	426	1.88					2
	0.119	430	1.89		8			
	0.136	489	2.15					3
	0.137	492	2.17			6		
	0.138	498	2.19					4
	0.146	524	2.31			7		
	0.146	526	2.32			8		
	0.155	557	2.45				5	
	0.176	635	2.80				6	
	0.180	647	2.85				7	
	0.193	695	3.06				8	
	0.231	830	3.66					5
	0.237	854	3.76					6
	0.253	909	4.00					7
	0.273	984	4.33					8

Accuracy: Greatest of either ±10% of controlled flow rate or 20 l/hr (0.0056 l/sec or 0.088 GPM).

20mm · 3/4" · composite cartridge · G-type								
Pressure range, ΔP: 40-400 kPaD (30-400 kPaD)* · 5.8-58 psid (4.4-58 psid)*								
			Model no.	**ABV1.G.Y**	**ABV1.G.R**	**ABV1.G.U**	**ABV1.G.B**	**ABV1.G.G**
Nominal flow rate	l/sec	l/hr	GPM	Grey*	Red	Blue	Black	Green
	0.0117	42.1	0.185	1				
	0.0189	68.0	0.300	2				
	0.0247	88.9	0.392	3				
	0.0325	117	0.515	4				
	0.0472	170	0.748	5				
	0.0528	190	0.837	6				
	0.0564	203	0.894			3		
	0.0597	215	0.946				3	
	0.0639	230	1.01	7				
	0.0694	250	1.10	8				
	0.0781	281	1.24		4			
	0.0908	327	1.44			4		
	0.0958	345	1.52				4	
	0.137	493	2.17		5			
	0.147	529	2.33					1
	0.161	581	2.56		6			
	0.173	624	2.75		7			
	0.181	652	2.87			5		
	0.181	653	2.88		8			
	0.186	670	2.95					2
	0.210	755	3.32					3
	0.216	779	3.43			6		
	0.218	785	3.46			7		
	0.220	792	3.49			8		
	0.237	853	3.75				5	
	0.241	869	3.83					4
	0.266	957	4.21				6	
	0.269	968	4.26				7	
	0.277	998	4.39				8	
	0.365	1320	5.79					5
	0.369	1330	5.85					6
	0.392	1410	6.21					7
	0.408	1470	6.46					8

Accuracy: Greatest of either ±10% of controlled flow rate or 20 l/hr (0.0056 l/sec or 0.088 GPM).

FLOW RATE SETTING - COMPOSITE CARTRIDGE - FOR VALVES DN25 LARGE AND DN32

40mm · 1 1/2" · composite cartridge · X-type					
Pressure range, ΔP: 15-130 kPaD · 2.2-18.9 psid					
			Model no.	ABV2.X.W	ABV2.X.R
Nominal flow rate	l/sec	l/hr	GPM	White	Red
	0.17	612	2.69	1	
	0.23	828	3.64	2	
	0.26	936	4.12		1
	0.33	1190	5.23	3	
	0.38	1370	6.02	4	
	0.39	1400	6.18		2
	0.48	1730	7.61	5	3
	0.54	1940	8.56	6	
	0.62	2230	9.83	7	
	0.63	2270	9.99		4
	0.66	2380	10.5	8	
	0.67	2410	10.6		5
	0.76	2740	12.0		6
	0.85	3060	13.5		7

Accuracy: Greatest of either ±10% of controlled flow rate or 20 l/hr (0.0056 l/sec or 0.088 GPM).

40mm · 1 1/2" · composite cartridge · C-type					
Pressure range. ΔP: 22-300 kPaD · 3.2-43.5 psid					
			Model no.	ABV2.C.W	ABV2.C.R
Nominal flow rate	l/sec	l/hr	GPM	White	Red
	0.23	828	3.65	1	
	0.31	1120	4.91	2	
	0.38	1370	6.02		1
	0.42	1510	6.66	3	
	0.47	1690	7.45	4	
	0.50	1800	7.93		2
	0.60	2160	9.51	5	
	0.64	2300	10.1		3
	0.68	2450	10.8	6	
	0.78	2810	12.4	7	
	0.83	2990	13.2		4
	0.84	3020	13.3	8	
	0.90	3240	14.3		5
	1.07	3850	17.0		6
	1.17	4210	18.5		7
	1.21	4360	19.2		8

Accuracy: Greatest of either ±10% of controlled flow rate or 20 l/hr (0.0056 l/sec or 0.088 GPM).

40mm · 1 1/2" · composite cartridge · D-type					
Pressure range. ΔP: 30-410 kPaD · 4.4-59.5 psid					
			Model no.	ABV2.D.W	ABV2.D.R
Nominal flow rate	l/sec	l/hr	GPM	White	Red
	0.27	972	4.28	1	
	0.36	1300	5.71	2	
	0.44	1580	6.97		1
	0.52	1870	8.24	3	
	0.58	2090	9.19	4	
	0.60	2160	9.51		2
	0.74	2660	11.7	5	
	0.76	2740	12.0		3
	0.83	2990	13.2	6	
	0.93	3350	14.7	7	
	0.99	3560	15.7	8	4
	1.07	3850	17.0		5
	1.28	4610	20.3		6
	1.39	5000	22.0		7
	1.43	5150	22.7		8

Accuracy: Greatest of either ±10% of controlled flow rate or 20 l/hr (0.0056 l/sec or 0.088 GPM).

FLOW RATE SETTING - E-JUST CARTRIDGE - FOR VALVES DN15-DN25 SMALL

20mm · 3/4" · E-JUST · Y-type · White pawl					
Pressure range, ΔP: 17-210 kPaD · 2.5-30 psid					
			Model no.	E-JUST1.Y.B	E-JUST1.Y.G
				Black	Green
	l/sec	l/hr	GPM	Setting	Setting
Nominal flow rate	0.0278	100	0.440	1.0	
	0.0299	108	0.475	1.1	
	0.0321	116	0.509	1.2	
	0.0343	123	0.543	1.3	
	0.0364	131	0.578	1.4	
	0.0386	139	0.612	1.5	
	0.0408	147	0.646	1.6	
	0.0429	155	0.681	1.7	
	0.0436	157	0.691		1.0
	0.0451	162	0.715	1.8	
	0.0468	168	0.741		1.1
	0.0473	170	0.749	1.9	
	0.0494	178	0.784	2.0	
	0.0499	180	0.791		1.2
	0.0516	186	0.818	2.1	
	0.0530	191	0.841		1.3
	0.0538	194	0.852	2.2	
	0.0559	201	0.887	2.3	
	0.0562	202	0.890		1.4
	0.0581	209	0.921	2.4	
	0.0593	214	0.940		1.5
	0.0603	217	0.955	2.5	
	0.0624	225	0.990	2.6	1.6
	0.0646	233	1.02	2.7	
	0.0656	236	1.04		1.7
	0.0668	240	1.06	2.8	
	0.0687	247	1.09		1.8
	0.0689	248	1.09	2.9	
	0.0711	256	1.13	3.0	
	0.0719	259	1.14		1.9
	0.0733	264	1.16	3.1	
	0.0750	270	1.19		2.0
	0.0754	272	1.20	3.2	
	0.0776	279	1.23	3.3	
	0.0781	281	1.24		2.1
	0.0798	287	1.26	3.4	
	0.0813	293	1.29		2.2
	0.0819	295	1.30	3.5	
	0.0841	303	1.33	3.6	
	0.0844	304	1.34		2.3
	0.0863	311	1.37	3.7	
	0.0876	315	1.39		2.4
	0.0884	318	1.40	3.8	

Continue next column...

20mm · 3/4" · E-JUST · Y-type · White pawl					
Pressure range, ΔP: 17-210 kPaD · 2.5-30 psid					
			Model no.	E-JUST1.Y.B	E-JUST1.Y.G
				Black	Green
	l/sec	l/hr	GPM	Setting	Setting
Nominal flow rate	0.0906	326	1.44	3.9	
	0.0907	327	1.44		2.5
	0.0928	334	1.47	4.0	
	0.0938	338	1.49		2.6
	0.0949	342	1.50	4.1	
	0.0970	349	1.54		2.7
	0.0971	350	1.54	4.2	
	0.0993	357	1.57	4.3	
	0.100	360	1.59		2.8
	0.101	365	1.61	4.4	
	0.103	372	1.64		2.9
	0.104	373	1.64	4.5	
	0.106	381	1.68	4.6	
	0.106	383	1.69		3.0
	0.108	389	1.71	4.7	
	0.110	394	1.74		3.1
	0.110	396	1.75	4.8	
	0.112	404	1.78	4.9	
	0.113	406	1.79		3.2
	0.114	412	1.81	5.0	
	0.116	417	1.84		3.3
	0.119	428	1.89		3.4
	0.122	440	1.94		3.5
	0.125	451	1.98		3.6
	0.128	462	2.03		3.7
	0.132	473	2.08		3.8
	0.135	485	2.13		3.9
	0.138	496	2.18		4.0
	0.141	507	2.23		4.1
	0.144	519	2.28		4.2
	0.147	530	2.33		4.3
	0.150	541	2.38		4.4
	0.153	553	2.43		4.5
	0.157	564	2.48		4.6
	0.160	575	2.53		4.7
	0.163	586	2.58		4.8
	0.166	598	2.63		4.9
	0.169	609	2.68		5.0

Accuracy: Greatest of
either ±5% of controlled flow rate
or ±2% of maximum flow rate

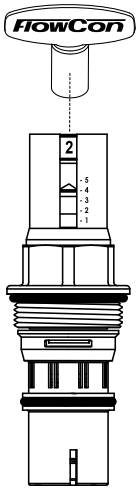

Use the FlowCon adjustment key (part number ACC0001) for adjusting the flow rate.

A setting of 4.2 corresponds to a flow rate of 0.144 l/sec for the 20mm green cartridge, range 17-210 kPaD.

FLOW RATE SETTING - E-JUST CARTRIDGE - FOR VALVES DN15-DN25 SMALL (continued)

20mm · 3/4" · E-JUST · Y-type · White pawl			
Pressure range. ΔP: 17-200 kPaD · 2.5-29 psid			
			Model no. E-JUST1.Y.R
			Red
Nominal flow rate	l/sec	l/hr	GPM	Setting
	0.0767	276	1.22	1.0
	0.0813	293	1.29	1.1
	0.0860	310	1.36	1.2
	0.0907	326	1.44	1.3
	0.0953	343	1.51	1.4
	0.100	360	1.58	1.5
	0.105	377	1.66	1.6
	0.109	393	1.73	1.7
	0.114	410	1.80	1.8
	0.118	426	1.88	1.9
	0.123	443	1.95	2.0
	0.128	459	2.02	2.1
	0.132	475	2.09	2.2
	0.136	491	2.16	2.3
	0.141	507	2.23	2.4
	0.145	523	2.30	2.5
	0.150	539	2.37	2.6
	0.154	554	2.44	2.7
	0.158	569	2.51	2.8
	0.162	584	2.57	2.9
	0.166	599	2.64	3.0
	0.170	614	2.70	3.1
	0.174	628	2.76	3.2
	0.178	642	2.83	3.3
	0.182	655	2.89	3.4
	0.186	669	2.94	3.5
	0.189	682	3.00	3.6
	0.193	695	3.06	3.7
	0.196	707	3.11	3.8
	0.200	719	3.17	3.9
	0.203	731	3.22	4.0
	0.206	742	3.27	4.1
	0.209	753	3.32	4.2
	0.212	764	3.36	4.3
	0.215	774	3.41	4.4
	0.218	784	3.45	4.5
	0.220	793	3.49	4.6
	0.223	802	3.53	4.7
	0.225	810	3.57	4.8
	0.227	818	3.60	4.9
	0.229	825	3.60	5.0

Accuracy: Greatest of
either ±5% of controlled flow rate
or ±2% of maximum flow rate

20mm · 3/4" · E-JUST · G-type · Grey pawl			
Pressure range. ΔP: 30-400 kPaD · 4.4-58 psid			
			Model no. E-JUST1.G.R
			Red
Nominal flow rate	l/sec	l/hr	GPM	Setting
	0.113	406	1.79	1.0
	0.119	427	1.88	1.1
	0.125	449	1.98	1.2
	0.131	470	2.07	1.3
	0.137	492	2.17	1.4
	0.143	513	2.26	1.5
	0.149	535	2.36	1.6
	0.155	556	2.45	1.7
	0.161	578	2.54	1.8
	0.167	599	2.64	1.9
	0.172	621	2.73	2.0
	0.178	642	2.83	2.1
	0.184	664	2.92	2.2
	0.190	685	3.02	2.3
	0.196	707	3.11	2.4
	0.202	728	3.21	2.5
	0.208	750	3.30	2.6
	0.214	771	3.40	2.7
	0.220	793	3.49	2.8
	0.226	814	3.59	2.9
	0.232	836	3.68	3.0
	0.238	857	3.78	3.1
	0.244	879	3.87	3.2
	0.250	900	3.96	3.3
	0.256	922	4.06	3.4
	0.262	943	4.15	3.5
	0.268	965	4.25	3.6
	0.274	987	4.34	3.7
	0.280	1010	4.44	3.8
	0.286	1030	4.53	3.9
	0.292	1050	4.63	4.0
	0.298	1070	4.72	4.1
	0.304	1090	4.82	4.2
	0.310	1120	4.91	4.3
	0.316	1140	5.01	4.4
	0.322	1160	5.10	4.5
	0.328	1180	5.20	4.6
	0.334	1200	5.29	4.7
	0.340	1220	5.38	4.8
	0.346	1240	5.48	4.9
	0.352	1270	5.57	5.0

Accuracy: Greatest of
either ±5% of controlled flow rate
or ±2% of maximum flow rate

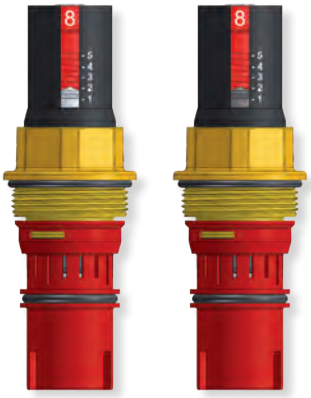

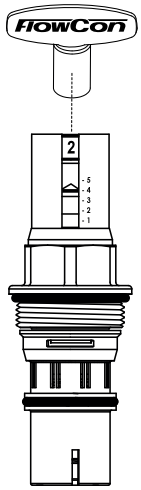

Use the FlowCon adjustment key (part number ACC0001) for adjusting the flow rate.

A setting of 4.2 corresponds to a flow rate of 0.304 l/sec for the 20mm red cartridge, range 30-400 kPaD.

FLOW RATE SETTING - E-JUST CARTRIDGE - FOR VALVES DN15-DN25 SMALL (continued)

20mm · 3/4" · E-JUST · G-type · Grey pawl					
Pressure range, ΔP: 35-400 kPaD · 5.1-58 psid					
			Model no.	E-JUST1.G.B	E-JUST1.G.G
				Black	Green
	l/sec	l/hr	GPM	Setting	Setting
Nominal flow rate	0.0383	138	0.607	1.0	
	0.0416	150	0.660	1.1	
	0.0449	162	0.712	1.2	
	0.0483	174	0.765	1.3	
	0.0516	186	0.817	1.4	
	0.0549	198	0.870	1.5	
	0.0582	210	0.922	1.6	
	0.0615	221	0.975	1.7	
	0.0648	233	1.03	1.8	
	0.0660	238	1.05		1.0
	0.0681	245	1.08	1.9	
	0.0706	254	1.12		1.1
	0.0714	257	1.13	2.0	
	0.0748	269	1.18	2.1	
	0.0751	271	1.19		1.2
	0.0781	281	1.24	2.2	
	0.0797	287	1.26		1.3
	0.0814	293	1.29	2.3	
	0.0843	304	1.34		1.4
	0.0847	305	1.34	2.4	
	0.0880	317	1.40	2.5	
	0.0889	320	1.41		1.5
	0.0913	329	1.45	2.6	
	0.0934	336	1.48		1.6
	0.0946	341	1.50	2.7	
	0.0979	353	1.55	2.8	
	0.0980	353	1.55		1.7
	0.101	365	1.61	2.9	
	0.103	369	1.63		1.8
	0.105	377	1.66	3.0	
	0.107	386	1.70		1.9
	0.108	388	1.71	3.1	
	0.111	400	1.76	3.2	
	0.112	402	1.77		2.0
	0.115	412	1.82	3.3	
	0.116	419	1.84		2.1
	0.118	424	1.87	3.4	
	0.121	435	1.92		2.2
	0.121	436	1.92	3.5	
	0.124	448	1.97	3.6	
	0.125	452	1.99		2.3
	0.128	460	2.03	3.7	
	0.130	468	2.06		2.4
	0.131	472	2.08	3.8	

Continue next column...

20mm · 3/4" · E-JUST · G-type · Grey pawl					
Pressure range, ΔP: 35-400 kPaD · 5.1-58 psid					
			Model no.	E-JUST1.G.B	E-JUST1.G.G
				Black	Green
	l/sec	l/hr	GPM	Setting	Setting
Nominal flow rate	0.134	484	2.13	3.9	
	0.135	485	2.13		2.5
	0.138	496	2.18	4.0	
	0.139	501	2.21		2.6
	0.141	508	2.24	4.1	
	0.144	517	2.28		2.7
	0.144	520	2.29	4.2	
	0.148	532	2.34	4.3	
	0.148	534	2.35		2.8
	0.151	544	2.39	4.4	
	0.153	550	2.42		2.9
	0.154	556	2.45	4.5	
	0.157	567	2.50		3.0
	0.158	567	2.50	4.6	
	0.161	579	2.55	4.7	
	0.162	583	2.57		3.1
	0.164	591	2.60	4.8	
	0.167	600	2.64		3.2
	0.168	603	2.66	4.9	
	0.171	615	2.71	5.0	
	0.171	616	2.71		3.3
	0.176	633	2.79		3.4
	0.180	649	2.86		3.5
	0.185	666	2.93		3.6
	0.189	682	3.00		3.7
	0.194	699	3.08		3.8
	0.199	715	3.15		3.9
	0.203	731	3.22		4.0
	0.208	748	3.29		4.1
	0.212	764	3.37		4.2
	0.217	781	3.44		4.3
	0.221	797	3.51		4.4
	0.226	814	3.58		4.5
	0.231	830	3.66		4.6
	0.235	847	3.73		4.7
	0.240	863	3.80		4.8
	0.244	880	3.87		4.9
	0.249	896	3.95		5.0

Accuracy: Greatest of
either ±5% of controlled flow rate
or ±2% of maximum flow rate

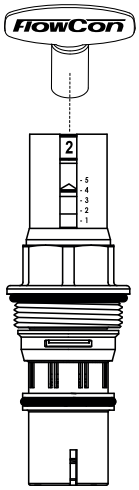

Use the FlowCon adjustment key (part number ACC0001) for adjusting the flow rate.

A setting of 4.2 corresponds to a flow rate of 0.212 l/sec for the 20mm green cartridge, range 35-400 kPaD.

FLOW RATE SETTING - E-JUST CARTRIDGE - FOR VALVES DN25 LARGE AND DN32

40mm · 1 1/2" · E-JUST · Y-type · White pawl				
Pressure range. ΔP: 17-400 kPaD · 2.5-58 psid				
			Model no.	E-JUST2.Y.G
Nominal flow rate	l/sec	l/hr	GPM	Setting
	0.149	535	2.36	1.0
	0.220	793	3.49	1.1
	0.289	1040	4.58	1.2
	0.355	1280	5.63	1.3
	0.418	1510	6.63	1.4
	0.479	1730	7.60	1.5
	0.538	1940	8.52	1.6
	0.594	2140	9.41	1.7
	0.647	2330	10.3	1.8
	0.699	2520	11.1	1.9
	0.748	2690	11.9	2.0
	0.795	2860	12.6	2.1
	0.841	3030	13.3	2.2
	0.884	3180	14.0	2.3
	0.925	3330	14.7	2.4
	0.965	3470	15.3	2.5
	1.00	3610	15.9	2.6
	1.04	3740	16.5	2.7
	1.07	3870	17.0	2.8
	1.11	3990	17.6	2.9
	1.14	4100	18.1	3.0
	1.17	4220	18.6	3.1
	1.20	4320	19.0	3.2
	1.23	4420	19.5	3.3
	1.26	4520	19.9	3.4
	1.28	4620	20.3	3.5
	1.31	4710	20.7	3.6
	1.33	4800	21.1	3.7
	1.36	4890	21.5	3.8
	1.38	4970	21.9	3.9
	1.40	5050	22.3	4.0
	1.43	5130	22.6	4.1
	1.45	5210	23.0	4.2
	1.47	5290	23.3	4.3
	1.49	5370	23.6	4.4
	1.51	5440	24.0	4.5
	1.53	5520	24.3	4.6
	1.55	5600	24.6	4.7
	1.58	5670	25.0	4.8
	1.60	5750	25.3	4.9
	1.62	5830	25.7	5.0

Accuracy: Greatest of
either ±5% of controlled flow rate
or ±2% of maximum flow rate

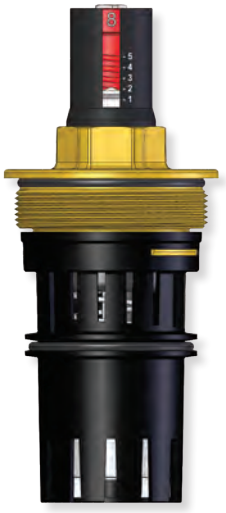

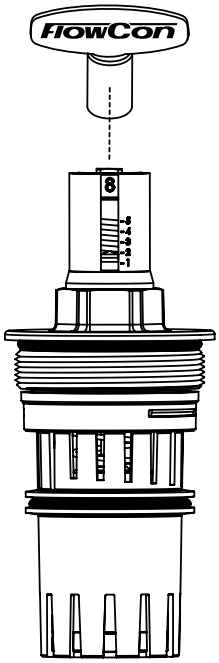

Use the FlowCon adjustment key (part number ACC0001) for adjusting the flow rate.

A setting of 4.2 corresponds to a flow rate of 1.45 l/sec for the 40mm cartridge, range 17-400 kPaD.

FLOW RATE SETTING - E-JUST CARTRIDGE - FOR VALVES DN40 AND DN50

50mm · 2” · E-JUST · G-type · Grey pawl				
Pressure range. ΔP: 20-400 kPaD · 2.9-58 psid				
			Model no.	E-JUST3.G.B
Nominal flow rate	l/sec	l/hr	GPM	Setting
	0.883	3180	14.0	1.0
	1.14	4100	18.0	1.1
	1.37	4940	21.7	1.2
	1.59	5710	25.1	1.3
	1.78	6420	28.3	1.4
	1.96	7070	31.1	1.5
	2.13	7660	33.7	1.6
	2.28	8200	36.1	1.7
	2.42	8700	38.3	1.8
	2.54	9150	40.3	1.9
	2.66	9570	42.1	2.0
	2.77	9960	43.8	2.1
	2.86	10300	45.4	2.2
	2.95	10600	46.8	2.3
	3.04	10900	48.2	2.4
	3.12	11200	49.4	2.5
	3.19	11500	50.6	2.6
	3.26	11700	51.7	2.7
	3.32	12000	52.7	2.8
	3.39	12200	53.7	2.9
	3.45	12400	54.6	3.0
	3.51	12600	55.6	3.1
	3.56	12800	56.5	3.2
	3.62	13000	57.3	3.3
	3.67	13200	58.2	3.4
	3.73	13400	59.1	3.5
	3.78	13600	59.9	3.6
	3.83	13800	60.8	3.7
	3.89	14000	61.6	3.8
	3.94	14200	62.4	3.9
	3.99	14400	63.3	4.0
	4.05	14600	64.1	4.1
	4.10	14800	65.0	4.2
	4.15	14900	65.8	4.3
	4.20	15100	66.6	4.4
	4.25	15300	67.4	4.5
	4.30	15500	68.2	4.6
	4.35	15700	68.9	4.7
	4.39	15800	69.6	4.8
	4.44	16000	70.3	4.9
	4.48	16100	70.9	5.0

Accuracy: Greatest of
either ±5% of controlled flow rate
or ±2% of maximum flow rate

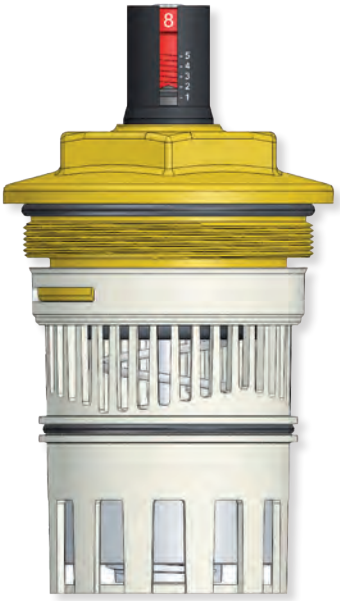

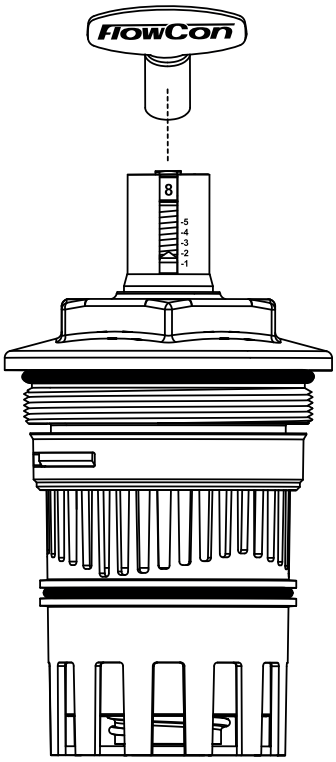

Use the FlowCon adjustment key (part number ACC0001) for adjusting the flow rate.

A setting of 4.2 corresponds to a flow rate of 4.10 l/sec for the 50mm cartridge, range 20-400 kPaD.

ACCESSORIES

- P/t plugs: 2 x ACC00101
- Blind cap: ACC0080 / ACC0081 / ACC0084 (cap (small / medium / large) without a cartridge for flushing out the system)
- Adjustment key: ACC0001 (key for adjusting the flow rate on E-JUST cartridges).

GENERAL SPECIFICATIONS

1. AUTOMATIC BALANCING VALVES - FLOWCON AB

1.1. Contractor shall install automatic balancing valves where indicated in drawings.
1.2. Valve shall consist of dynamic, accessible, adjustable flow limiting device.

2. VALVE HOUSING

2.1. Valve housing shall consist of forged brass ASTM CuZn40Pb2, rated at no less than 2500 kPa static pressure and +120°C.
2.2. Valve housing shall be permanently marked to show direction of flow.
2.3. Optional dual pressure/temperature test plugs for verifying accuracy of flow performance shall be available for all valve sizes.
2.4. Housing shall be configured for flow regulation unit accessibility.

3.a. FLOW REGULATOR / AUTOMATIC BALANCING UNIT / <u>COMPOSITE CARTRIDGE</u>

3.a.1. Flow regulation unit assembly shall be manufactured of polyoxymethylene with a hydrogenated acrylonitrile-butadiene rubber or EPDM diaphragm and stainless steel 18-8 spring.
3.a.2. Flow regulation unit shall be readily accessible for change-out or maintenance.
3.a.3. Flow regulation unit shall be adjustable to 1 of 8 different flow rates; shall be available in 2 different kPaD operational ranges for DN15/20/25 and 3 different kPaD operational ranges for DN25/32/40; minimum range shall be capable of being activated by minimum 15 kPaD. Further, the flow regulation unit shall be capable of controlling flow within ±10% of rated flow rate or 20l/hr.
3.a.4. Identification tags shall be available for all valves; tags shall be indelibly marked with flow rate, color and dial setting.

OR…

3.b. FLOW REGULATOR / AUTOMATIC BALANCING UNIT / <u>E-JUST CARTRIDGE</u>

3.b.1. Flow regulation unit assembly shall be manufactured of polysulfone with a hydrogenated acrylonitrile-butadiene rubber or EPDM diaphragm and stainless steel 18-8 spring.
3.b.2. Flow regulation unit shall be readily accessible for change-out or maintenance.
3.b.3 Flow regulation unit shall be adjustable with the valve in-line and the system in operation.
3.b.4. Flow regulation unit shall be externally adjustable to 1 of 41 different flow rates; shall be available in 4 different kPaD operational ranges for DN15/20/25, 1 kPaD operational range for DN25/32/40 and 1 kPaD operational range for DN40/50; minimum range shall be capable of being activated by minimum 17 kPaD. Further, the flow regulation unit shall be capable of controlling flow within ±5% of rated flow or ±2% of maximum flow.
3.b.5. Identification tags shall be available for all valves; tags shall be indelibly marked with flow rate, colour and dial setting.

APPLICATION AND SCHEMATIC EXAMPLE

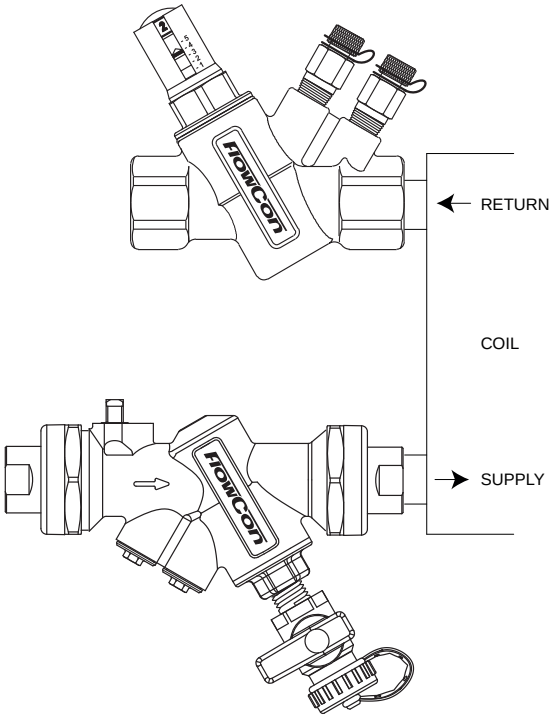

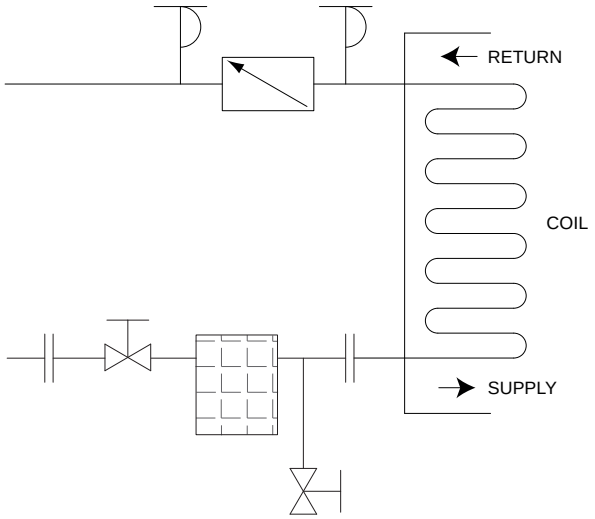

UPDATES

For latest updates please see www.flowcon.com

FlowCon ABV 15-40mm

Dynamic Balancing Valve - Adjustable Cartridge

SPECIFICATIONS

Pressure rating:	2500 kPa / 360 psi
Temperature rating, media:	-20°C to +120°C / -4°F to +248°F
Material:	
- Cartridge:	Composite cartridges: POM (Polyoxymethylene) E-JUST cartridges: PSU (Polysulfone)
- Diaphragm:	Hydrogenated acrylonitrile-butadiene-rubber or EPDM depending on type
- Body:	Forged brass ASTM CuZn40Pb2
- Ball valve:	Chemically nickel plated brass ball
- Union end connections:	Brass alloy ISO or NPT
- O-rings:	EPDM
Body tappings:	1/4” ISO
Flow rate range:	0.0081-1.43 l/sec (standard composite cartridge) 0.0278-1.62 l/sec (E-JUST cartridge)

DIMENSIONS AND WEIGHTS (NOMINAL) (measured in mm unless noted)

Model no.	Valve size	Cartridge size	L	H1	H2	H3	End connections C[1]			Weight (kgs.) w/o end conn.	Kv[2] (m^3/hr)
							ISO female	ISO male	Sweat		
ABV1	15	20	122	66	33	78	22	25	20	0.8	2.6
	20						22	25	20		
	25						N/A	39	22		
ABV2	25	40	162	75	42	99	35	40	34	2.5	12.5
	32						33	40	37		
	40						33	42	N/A		

Note 1: Add end connection length to body length.
Note 2: For valve body.

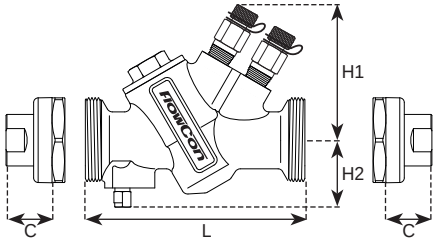

FlowCon ABV with composite cartridge

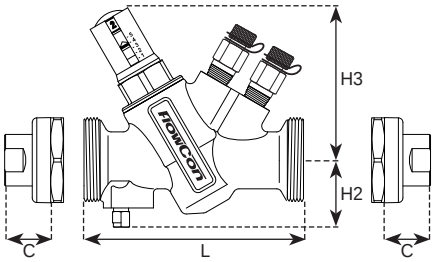

FlowCon ABV with E-JUST cartridge

MODEL NUMBER SELECTION[3]

ABV ____ . ____ . ____ . ____ . ____ . ____ . ____ . ____

Insert body size:
1=ABV1 (union end 15/20/25mm) 2=ABV2 (union end 25/32/40mm)

Leave it blank if taps open B=pressure temperature plugs P=taps plugged

Insert inlet x outlet union end connections:

Body size	Female threaded	Male treaded	Sweat
Union end 15-20mm, 1/2”-1” with 20mm composite cartridge or 20mm E-JUST cartridge	E=15mm=1/2” F=20mm=3/4”	H=15mm=1/2” I=20mm=3/4” J=25mm=1”	K=15mm L=18mm M=22mm
Union end 25-40mm, 1”-1 1/2” with 40mm composite cartridge or 40mm E-JUST cartridge	G=25mm=1” P=32mm=1 1/4” Q=40mm=1 1/2”	J=25mm=1” S=32mm=1 1/4” T=40mm=1 1/2”	N=28mm W=35mm

Insert connection standard:
I=ISO N=NPT

Insert a kPaD control range:
0 if no cartridge required
Y=15-130 kPaD (20mm standard composite cartridge)
17-200 kPaD (20mm E-JUST red - white pawl)
17-210 kPaD (20mm E-JUST black or green - white pawl)
17-400 kPaD (40mm E-JUST - white pawl)
G=30-400 kPaD (20mm standard composite cartridge)
30-400 kPaD (20mm E-JUST red - grey pawl)
35-400 kPaD (20mm E-JUST black or green - grey pawl)
X=15-130 kPaD (40mm standard composite cartridge)
C=22-300 kPaD (40mm standard composite cartridge)
D=30-410 kPaD (40mm standard composite cartridge)
(Determine from cartridge selection chart)

Insert automatic flow limiting cartridge code:
0 if no cartridge required Y=grey R=red U=blue B=black G=green W=white
(Determine from cartridge selection chart)

Insert cartridge dial setting/type:
1 to 8=dial setting on standard composite cartridge
0=standard pre-setting of 2 on standard composite cartridge
E=E-JUST cartridge
(Determine from cartridge selection chart)

Example: ABV1.B.E.E.I.Y.B.E=ABV1-body with p/t plugs, 15mm ISO female threaded union end connections with a Y-type black E-JUST cartridge.

Note 3: Flow rate, color and dial setting of cartridge are indicated on label affixed to body.

FLOW RATE SETTING - COMPOSITE CARTRIDGE - FOR VALVES DN15-DN25 SMALL

20mm · 3/4" · composite cartridge · Y-type								
Pressure range, ΔP: 20-130 kPaD (15-130 kPaD)* · 2.9-18.9 psid (2.2-18.9 psid)*								
			Model no.	ABV1.Y.Y	ABV1.Y.R	ABV1.Y.U	ABV1.Y.B	ABV1.Y.G
Nominal flow rate	l/sec	l/hr	GPM	Grey*	Red	Blue	Black	Green
	0.0081	29.2	0.128	1				
	0.0133	47.9	0.211	2				
	0.0175	63.0	0.277	3				
	0.0222	79.9	0.352	4				
	0.0311	112	0.493	5				
	0.0353	127	0.560	6				
	0.0383	138	0.607	7				
	0.0431	155	0.683	8				
	0.0450	162	0.713				3	
	0.0575	207	0.911		4			
	0.0619	223	0.981			4		
	0.0669	241	1.06				4	
	0.0922	332	1.46		5			
	0.0978	352	1.55					1
	0.105	378	1.66		6			
	0.114	409	1.80		7			
	0.115	415	1.83			5		
	0.118	426	1.88					2
	0.119	430	1.89		8			
	0.136	489	2.15					3
	0.137	492	2.17			6		
	0.138	498	2.19					4
	0.146	524	2.31			7		
	0.146	526	2.32			8		
	0.155	557	2.45				5	
	0.176	635	2.80				6	
	0.180	647	2.85				7	
	0.193	695	3.06				8	
	0.231	830	3.66					5
	0.237	854	3.76					6
	0.253	909	4.00					7
	0.273	984	4.33					8

Accuracy: Greatest of either ±10% of controlled flow rate or 20 l/hr (0.0056 l/sec or 0.088 GPM).

20mm · 3/4" · composite cartridge · G-type								
Pressure range, ΔP: 40-400 kPaD (30-400 kPaD)* · 5.8-58 psid (4.4-58 psid)*								
			Model no.	ABV1.G.Y	ABV1.G.R	ABV1.G.U	ABV1.G.B	ABV1.G.G
Nominal flow rate	l/sec	l/hr	GPM	Grey*	Red	Blue	Black	Green
	0.0117	42.1	0.185	1				
	0.0189	68.0	0.300	2				
	0.0247	88.9	0.392	3				
	0.0325	117	0.515	4				
	0.0472	170	0.748	5				
	0.0528	190	0.837	6				
	0.0564	203	0.894			3		
	0.0597	215	0.946				3	
	0.0639	230	1.01	7				
	0.0694	250	1.10	8				
	0.0781	281	1.24		4			
	0.0908	327	1.44			4		
	0.0958	345	1.52				4	
	0.137	493	2.17		5			
	0.147	529	2.33					1
	0.161	581	2.56		6			
	0.173	624	2.75		7			
	0.181	652	2.87			5		
	0.181	653	2.88		8			
	0.186	670	2.95					2
	0.210	755	3.32					3
	0.216	779	3.43			6		
	0.218	785	3.46			7		
	0.220	792	3.49			8		
	0.237	853	3.75				5	
	0.241	869	3.83					4
	0.266	957	4.21				6	
	0.269	968	4.26				7	
	0.277	998	4.39				8	
	0.365	1320	5.79					5
	0.369	1330	5.85					6
	0.392	1410	6.21					7
	0.408	1470	6.46					8

Accuracy: Greatest of either ±10% of controlled flow rate or 20 l/hr (0.0056 l/sec or 0.088 GPM).

FLOW RATE SETTING - COMPOSITE CARTRIDGE - FOR VALVES DN25 LARGE-DN40

40mm · 1 1/2" · composite cartridge · X-type					
Pressure range, ΔP: 15-130 kPaD · 2.2-18.9 psid					
			Model no.	ABV2.X.W	ABV2.X.R
Nominal flow rate	l/sec	l/hr	GPM	White	Red
	0.17	612	2.69	1	
	0.23	828	3.64	2	
	0.26	936	4.12		1
	0.33	1190	5.23	3	
	0.38	1370	6.02	4	
	0.39	1400	6.18		2
	0.48	1730	7.61	5	3
	0.54	1940	8.56	6	
	0.62	2230	9.83	7	
	0.63	2270	9.99		4
	0.66	2380	10.5	8	
	0.67	2410	10.6		5
	0.76	2740	12.0		6
	0.85	3060	13.5		7

Accuracy: Greatest of either ±10% of controlled flow rate or 20 l/hr (0.0056 l/sec or 0.088 GPM).

40mm · 1 1/2" · composite cartridge · C-type					
Pressure range. ΔP: 22-300 kPaD · 3.2-43.5 psid					
			Model no.	ABV2.C.W	ABV2.C.R
Nominal flow rate	l/sec	l/hr	GPM	White	Red
	0.23	828	3.65	1	
	0.31	1120	4.91	2	
	0.38	1370	6.02		1
	0.42	1510	6.66	3	
	0.47	1690	7.45	4	
	0.50	1800	7.93		2
	0.60	2160	9.51	5	
	0.64	2300	10.1		3
	0.68	2450	10.8	6	
	0.78	2810	12.4	7	
	0.83	2990	13.2		4
	0.84	3020	13.3	8	
	0.90	3240	14.3		5
	1.07	3850	17.0		6
	1.17	4210	18.5		7
	1.21	4360	19.2		8

Accuracy: Greatest of either ±10% of controlled flow rate or 20 l/hr (0.0056 l/sec or 0.088 GPM).

40mm · 1 1/2" · composite cartridge · D-type					
Pressure range. ΔP: 30-410 kPaD · 4.4-59.5 psid					
			Model no.	ABV2.D.W	ABV2.D.R
Nominal flow rate	l/sec	l/hr	GPM	White	Red
	0.27	972	4.28	1	
	0.36	1300	5.71	2	
	0.44	1580	6.97		1
	0.52	1870	8.24	3	
	0.58	2090	9.19	4	
	0.60	2160	9.51		2
	0.74	2660	11.7	5	
	0.76	2740	12.0		3
	0.83	2990	13.2	6	
	0.93	3350	14.7	7	
	0.99	3560	15.7	8	4
	1.07	3850	17.0		5
	1.28	4610	20.3		6
	1.39	5000	22.0		7
	1.43	5150	22.7		8

Accuracy: Greatest of either ±10% of controlled flow rate or 20 l/hr (0.0056 l/sec or 0.088 GPM).

FLOW RATE SETTING - E-JUST CARTRIDGE - FOR VALVES DN15-DN25 SMALL

20mm · 3/4" · E-JUST · Y-type · White pawl					
Pressure range, ΔP: 17-210 kPaD · 2.5-30 psid					
			Model no.	E-JUST1.Y.B	E-JUST1.Y.G
				Black	Green
	l/sec	l/hr	GPM	Setting	Setting
Nominal flow rate	0.0278	100	0.440	1.0	
	0.0299	108	0.475	1.1	
	0.0321	116	0.509	1.2	
	0.0343	123	0.543	1.3	
	0.0364	131	0.578	1.4	
	0.0386	139	0.612	1.5	
	0.0408	147	0.646	1.6	
	0.0429	155	0.681	1.7	
	0.0436	157	0.691		1.0
	0.0451	162	0.715	1.8	
	0.0468	168	0.741		1.1
	0.0473	170	0.749	1.9	
	0.0494	178	0.784	2.0	
	0.0499	180	0.791		1.2
	0.0516	186	0.818	2.1	
	0.0530	191	0.841		1.3
	0.0538	194	0.852	2.2	
	0.0559	201	0.887	2.3	
	0.0562	202	0.890		1.4
	0.0581	209	0.921	2.4	
	0.0593	214	0.940		1.5
	0.0603	217	0.955	2.5	
	0.0624	225	0.990	2.6	1.6
	0.0646	233	1.02	2.7	
	0.0656	236	1.04		1.7
	0.0668	240	1.06	2.8	
	0.0687	247	1.09		1.8
	0.0689	248	1.09	2.9	
	0.0711	256	1.13	3.0	
	0.0719	259	1.14		1.9
	0.0733	264	1.16	3.1	
	0.0750	270	1.19		2.0
	0.0754	272	1.20	3.2	
	0.0776	279	1.23	3.3	
	0.0781	281	1.24		2.1
	0.0798	287	1.26	3.4	
	0.0813	293	1.29		2.2
	0.0819	295	1.30	3.5	
	0.0841	303	1.33	3.6	
	0.0844	304	1.34		2.3
	0.0863	311	1.37	3.7	
	0.0876	315	1.39		2.4
	0.0884	318	1.40	3.8	

Continue next column...

20mm · 3/4" · E-JUST · Y-type · White pawl					
Pressure range, ΔP: 17-210 kPaD · 2.5-30 psid					
			Model no.	E-JUST1.Y.B	E-JUST1.Y.G
				Black	Green
	l/sec	l/hr	GPM	Setting	Setting
Nominal flow rate	0.0906	326	1.44	3.9	
	0.0907	327	1.44		2.5
	0.0928	334	1.47	4.0	
	0.0938	338	1.49		2.6
	0.0949	342	1.50	4.1	
	0.0970	349	1.54		2.7
	0.0971	350	1.54	4.2	
	0.0993	357	1.57	4.3	
	0.100	360	1.59		2.8
	0.101	365	1.61	4.4	
	0.103	372	1.64		2.9
	0.104	373	1.64	4.5	
	0.106	381	1.68	4.6	
	0.106	383	1.69		3.0
	0.108	389	1.71	4.7	
	0.110	394	1.74		3.1
	0.110	396	1.75	4.8	
	0.112	404	1.78	4.9	
	0.113	406	1.79		3.2
	0.114	412	1.81	5.0	
	0.116	417	1.84		3.3
	0.119	428	1.89		3.4
	0.122	440	1.94		3.5
	0.125	451	1.98		3.6
	0.128	462	2.03		3.7
	0.132	473	2.08		3.8
	0.135	485	2.13		3.9
	0.138	496	2.18		4.0
	0.141	507	2.23		4.1
	0.144	519	2.28		4.2
	0.147	530	2.33		4.3
	0.150	541	2.38		4.4
	0.153	553	2.43		4.5
	0.157	564	2.48		4.6
	0.160	575	2.53		4.7
	0.163	586	2.58		4.8
	0.166	598	2.63		4.9
	0.169	609	2.68		5.0

Accuracy: Greatest of
either ±5% of controlled flow rate
or ±2% of maximum flow rate

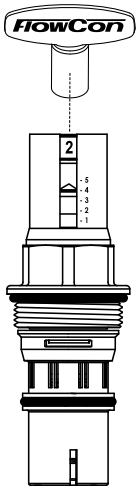

Use the FlowCon adjustment key (part number ACC0001) for adjusting the flow rate.

A setting of 4.2 corresponds to a flow rate of 0.144 l/sec for the 20mm green cartridge, range 17-210 kPaD.

FLOW RATE SETTING - E-JUST CARTRIDGE - FOR VALVES DN15-DN25 SMALL (continued)

20mm · 3/4" · E-JUST · Y-type · White pawl			
Pressure range. ΔP: 17-200 kPaD · 2.5-29 psid			
			Model no. E-JUST1.Y.R
			Red
	l/sec	l/hr	GPM	Setting
Nominal flow rate	0.0767	276	1.22	1.0
	0.0813	293	1.29	1.1
	0.0860	310	1.36	1.2
	0.0907	326	1.44	1.3
	0.0953	343	1.51	1.4
	0.100	360	1.58	1.5
	0.105	377	1.66	1.6
	0.109	393	1.73	1.7
	0.114	410	1.80	1.8
	0.118	426	1.88	1.9
	0.123	443	1.95	2.0
	0.128	459	2.02	2.1
	0.132	475	2.09	2.2
	0.136	491	2.16	2.3
	0.141	507	2.23	2.4
	0.145	523	2.30	2.5
	0.150	539	2.37	2.6
	0.154	554	2.44	2.7
	0.158	569	2.51	2.8
	0.162	584	2.57	2.9
	0.166	599	2.64	3.0
	0.170	614	2.70	3.1
	0.174	628	2.76	3.2
	0.178	642	2.83	3.3
	0.182	655	2.89	3.4
	0.186	669	2.94	3.5
	0.189	682	3.00	3.6
	0.193	695	3.06	3.7
	0.196	707	3.11	3.8
	0.200	719	3.17	3.9
	0.203	731	3.22	4.0
	0.206	742	3.27	4.1
	0.209	753	3.32	4.2
	0.212	764	3.36	4.3
	0.215	774	3.41	4.4
	0.218	784	3.45	4.5
	0.220	793	3.49	4.6
	0.223	802	3.53	4.7
	0.225	810	3.57	4.8
	0.227	818	3.60	4.9
	0.229	825	3.60	5.0

Accuracy: Greatest of
either ±5% of controlled flow rate
or ±2% of maximum flow rate

20mm · 3/4" · E-JUST · G-type · Grey pawl			
Pressure range. ΔP: 30-400 kPaD · 4.4-58 psid			
			Model no. E-JUST1.G.R
			Red
	l/sec	l/hr	GPM	Setting
Nominal flow rate	0.113	406	1.79	1.0
	0.119	427	1.88	1.1
	0.125	449	1.98	1.2
	0.131	470	2.07	1.3
	0.137	492	2.17	1.4
	0.143	513	2.26	1.5
	0.149	535	2.36	1.6
	0.155	556	2.45	1.7
	0.161	578	2.54	1.8
	0.167	599	2.64	1.9
	0.172	621	2.73	2.0
	0.178	642	2.83	2.1
	0.184	664	2.92	2.2
	0.190	685	3.02	2.3
	0.196	707	3.11	2.4
	0.202	728	3.21	2.5
	0.208	750	3.30	2.6
	0.214	771	3.40	2.7
	0.220	793	3.49	2.8
	0.226	814	3.59	2.9
	0.232	836	3.68	3.0
	0.238	857	3.78	3.1
	0.244	879	3.87	3.2
	0.250	900	3.96	3.3
	0.256	922	4.06	3.4
	0.262	943	4.15	3.5
	0.268	965	4.25	3.6
	0.274	987	4.34	3.7
	0.280	1010	4.44	3.8
	0.286	1030	4.53	3.9
	0.292	1050	4.63	4.0
	0.298	1070	4.72	4.1
	0.304	1090	4.82	4.2
	0.310	1120	4.91	4.3
	0.316	1140	5.01	4.4
	0.322	1160	5.10	4.5
	0.328	1180	5.20	4.6
	0.334	1200	5.29	4.7
	0.340	1220	5.38	4.8
	0.346	1240	5.48	4.9
	0.352	1270	5.57	5.0

Accuracy: Greatest of
either ±5% of controlled flow rate
or ±2% of maximum flow rate

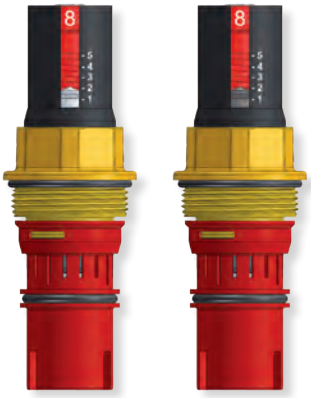

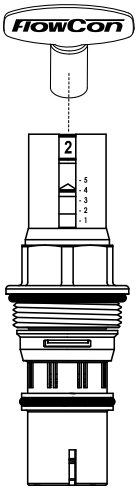

Use the FlowCon adjustment key (part number ACC0001) for adjusting the flow rate.

A setting of 4.2 corresponds to a flow rate of 0.304 l/sec for the 20mm red cartridge, range 30-400 kPaD.

FLOW RATE SETTING - E-JUST CARTRIDGE - FOR VALVES DN15-DN25 SMALL (continued)

20mm · 3/4" · E-JUST · G-type · Grey pawl					
Pressure range, ΔP: 35-400 kPaD · 5.1-58 psid					
			Model no.	E-JUST1.G.B	E-JUST1.G.G
				Black	Green
	l/sec	l/hr	GPM	Setting	Setting
Nominal flow rate	0.0383	138	0.607	1.0	
	0.0416	150	0.660	1.1	
	0.0449	162	0.712	1.2	
	0.0483	174	0.765	1.3	
	0.0516	186	0.817	1.4	
	0.0549	198	0.870	1.5	
	0.0582	210	0.922	1.6	
	0.0615	221	0.975	1.7	
	0.0648	233	1.03	1.8	
	0.0660	238	1.05		1.0
	0.0681	245	1.08	1.9	
	0.0706	254	1.12		1.1
	0.0714	257	1.13	2.0	
	0.0748	269	1.18	2.1	
	0.0751	271	1.19		1.2
	0.0781	281	1.24	2.2	
	0.0797	287	1.26		1.3
	0.0814	293	1.29	2.3	
	0.0843	304	1.34		1.4
	0.0847	305	1.34	2.4	
	0.0880	317	1.40	2.5	
	0.0889	320	1.41		1.5
	0.0913	329	1.45	2.6	
	0.0934	336	1.48		1.6
	0.0946	341	1.50	2.7	
	0.0979	353	1.55	2.8	
	0.0980	353	1.55		1.7
	0.101	365	1.61	2.9	
	0.103	369	1.63		1.8
	0.105	377	1.66	3.0	
	0.107	386	1.70		1.9
	0.108	388	1.71	3.1	
	0.111	400	1.76	3.2	
	0.112	402	1.77		2.0
	0.115	412	1.82	3.3	
	0.116	419	1.84		2.1
	0.118	424	1.87	3.4	
	0.121	435	1.92		2.2
	0.121	436	1.92	3.5	
	0.124	448	1.97	3.6	
	0.125	452	1.99		2.3
	0.128	460	2.03	3.7	
	0.130	468	2.06		2.4
	0.131	472	2.08	3.8	

Continue next column...

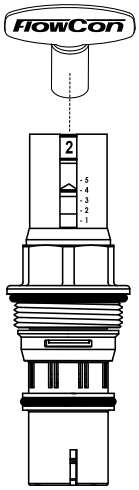

Use the FlowCon adjustment key (part number ACC0001) for adjusting the flow rate.

A setting of 4.2 corresponds to a flow rate of 0.212 l/sec for the 20mm green cartridge, range 35-400 kPaD.

20mm · 3/4" · E-JUST · G-type · Grey pawl					
Pressure range, ΔP: 35-400 kPaD · 5.1-58 psid					
			Model no.	E-JUST1.G.B	E-JUST1.G.G
				Black	Green
	l/sec	l/hr	GPM	Setting	Setting
Nominal flow rate	0.134	484	2.13	3.9	
	0.135	485	2.13		2.5
	0.138	496	2.18	4.0	
	0.139	501	2.21		2.6
	0.141	508	2.24	4.1	
	0.144	517	2.28		2.7
	0.144	520	2.29	4.2	
	0.148	532	2.34	4.3	
	0.148	534	2.35		2.8
	0.151	544	2.39	4.4	
	0.153	550	2.42		2.9
	0.154	556	2.45	4.5	
	0.157	567	2.50		3.0
	0.158	567	2.50	4.6	
	0.161	579	2.55	4.7	
	0.162	583	2.57		3.1
	0.164	591	2.60	4.8	
	0.167	600	2.64		3.2
	0.168	603	2.66	4.9	
	0.171	615	2.71	5.0	
	0.171	616	2.71		3.3
	0.176	633	2.79		3.4
	0.180	649	2.86		3.5
	0.185	666	2.93		3.6
	0.189	682	3.00		3.7
	0.194	699	3.08		3.8
	0.199	715	3.15		3.9
	0.203	731	3.22		4.0
	0.208	748	3.29		4.1
	0.212	764	3.37		4.2
	0.217	781	3.44		4.3
	0.221	797	3.51		4.4
	0.226	814	3.58		4.5
	0.231	830	3.66		4.6
	0.235	847	3.73		4.7
	0.240	863	3.80		4.8
	0.244	880	3.87		4.9
	0.249	896	3.95		5.0

Accuracy: Greatest of
either ±5% of controlled flow rate
or ±2% of maximum flow rate

FLOW RATE SETTING - E-JUST CARTRIDGE - FOR VALVES DN25 LARGE-DN40

40mm · 1 1/2" · E-JUST · Y-type · White pawl				
Pressure range. ΔP: 17-400 kPaD · 2.5-58 psid				
			Model no.	E-JUST2.Y.G
Nominal flow rate	l/sec	l/hr	GPM	Setting
	0.149	535	2.36	1.0
	0.220	793	3.49	1.1
	0.289	1040	4.58	1.2
	0.355	1280	5.63	1.3
	0.418	1510	6.63	1.4
	0.479	1730	7.60	1.5
	0.538	1940	8.52	1.6
	0.594	2140	9.41	1.7
	0.647	2330	10.3	1.8
	0.699	2520	11.1	1.9
	0.748	2690	11.9	2.0
	0.795	2860	12.6	2.1
	0.841	3030	13.3	2.2
	0.884	3180	14.0	2.3
	0.925	3330	14.7	2.4
	0.965	3470	15.3	2.5
	1.00	3610	15.9	2.6
	1.04	3740	16.5	2.7
	1.07	3870	17.0	2.8
	1.11	3990	17.6	2.9
	1.14	4100	18.1	3.0
	1.17	4220	18.6	3.1
	1.20	4320	19.0	3.2
	1.23	4420	19.5	3.3
	1.26	4520	19.9	3.4
	1.28	4620	20.3	3.5
	1.31	4710	20.7	3.6
	1.33	4800	21.1	3.7
	1.36	4890	21.5	3.8
	1.38	4970	21.9	3.9
	1.40	5050	22.3	4.0
	1.43	5130	22.6	4.1
	1.45	5210	23.0	4.2
	1.47	5290	23.3	4.3
	1.49	5370	23.6	4.4
	1.51	5440	24.0	4.5
	1.53	5520	24.3	4.6
	1.55	5600	24.6	4.7
	1.58	5670	25.0	4.8
	1.60	5750	25.3	4.9
	1.62	5830	25.7	5.0

Accuracy: Greatest of
either ±5% of controlled flow rate
or ±2% of maximum flow rate

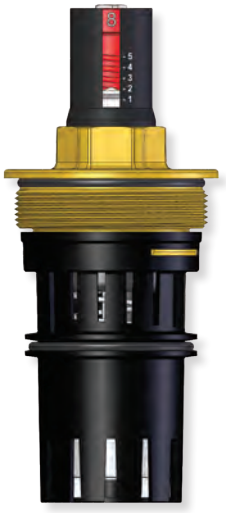

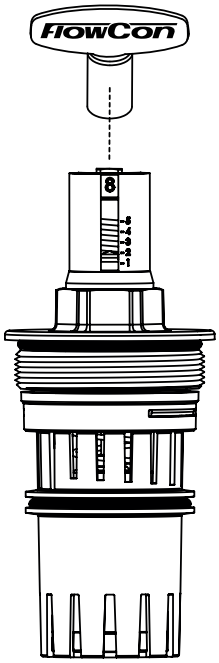

Use the FlowCon adjustment key (part number ACC0001) for adjusting the flow rate.

A setting of 4.2 corresponds to a flow rate of 1.45 l/sec for the 40mm cartridge, range 17-400 kPaD.

ACCESSORIES

- P/t plugs: 2 x ACC00101
- Blind cap: ACC0080 / ACC0081 (cap (small / medium) without a cartridge for flushing out the system)
- Adjustment key: ACC0001 (key for adjusting the flow rate on E-JUST cartridges and turning the ball valve).

GENERAL SPECIFICATIONS

1. AUTOMATIC BALANCING VALVES WITH INTEGRAL ISOLATION BALL VALVE - FLOWCON ABV

1.1. Contractor shall install automatic balancing valves where indicated in drawings.
1.2. Valve shall consist of dynamic, accessible, adjustable flow limiting device and integral isolation ball valve.

2. VALVE HOUSING AND BALL VALVE

2.1. Valve housing shall consist of forged brass ASTM CuZn40Pb2, rated at no less than 2500 kPa static pressure and +120°C.
2.2. Valve ball shall consist of chemically nickel plated brass (ASTM CuZn40Pb2).
2.3. Valve housing shall be permanently marked to show direction of flow.
2.4. Valve housing shall be double union end constructed with a range of pipe connections available for the appropriate pipe size.
2.5. Optional dual pressure/temperature test plugs for verifying accuracy of flow performance shall be available for all valve sizes.
2.6. Housing shall be configured for flow regulation unit accessibility.

3.a. FLOW REGULATOR / AUTOMATIC BALANCING UNIT / <u>COMPOSITE CARTRIDGE</u>

3.a.1. Flow regulation unit assembly shall be manufactured of polyoxymethylene with a hydrogenated acrylonitrile-butadiene rubber or EPDM diaphragm and stainless steel 18-8 spring.
3.a.2. Flow regulation unit shall be readily accessible for change-out or maintenance.
3.a.3. Flow regulation unit shall be adjustable to 1 of 8 different flow rates; shall be available in 2 different kPaD operational ranges for DN15/20/25 and 3 different kPaD operational ranges for DN25/32/40; minimum range shall be capable of being activated by minimum 15 kPaD. Further, the flow regulation unit shall be capable of controlling flow within ±10% of rated flow rate or 20l/hr.
3.a.4. Identification tags shall be available for all valves; tags shall be indelibly marked with flow rate, color and dial setting.

OR…

3.b. FLOW REGULATOR / AUTOMATIC BALANCING UNIT / <u>E-JUST CARTRIDGE</u>

3.b.1. Flow regulation unit assembly shall be manufactured of polysulfone with a hydrogenated acrylonitrile-butadiene rubber or EPDM diaphragm and stainless steel 18-8 spring.
3.b.2. Flow regulation unit shall be readily accessible for change-out or maintenance.
3.b.3. Flow regulation unit shall be adjustable with the valve in-line and the system in operation.
3.b.4. Flow regulation unit shall be externally adjustable to 1 of 41 different flow rates; shall be available in 4 different kPaD operational ranges for DN15/20/25 and 1 kPaD operational ranges for DN25/32/40; minimum range shall be capable of being activated by minimum 17 kPaD. Further, the flow regulation unit shall be capable of controlling flow within ±5% of rated flow or ±2% of maximum flow.
3.b.5. Identification tags shall be available for all valves; tags shall be indelibly marked with flow rate, color and dial setting.

APPLICATION EXAMPLE

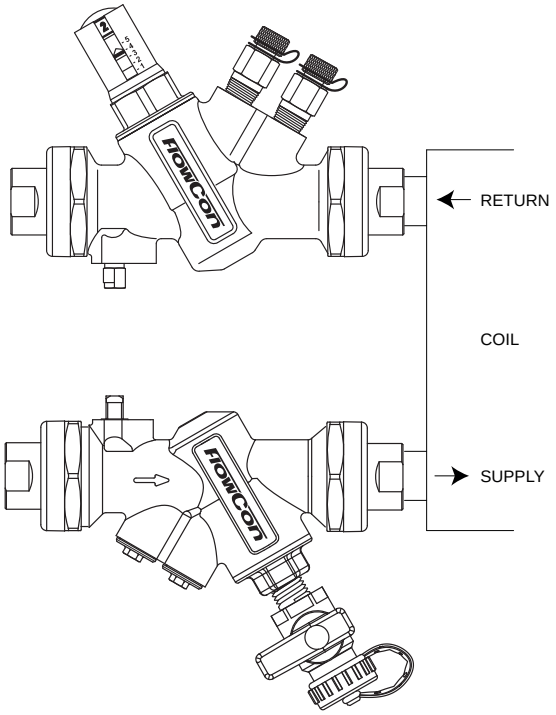

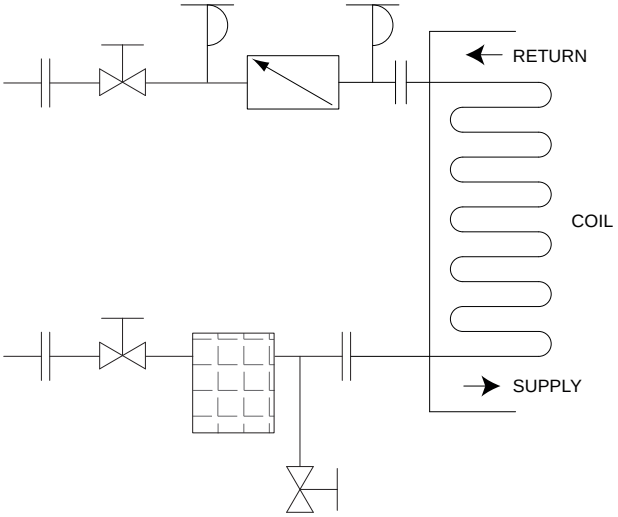

UPDATES

For latest updates please see www.flowcon.com

FlowCon SH

Externally Adjustable Dynamic Balancing Valve

FlowCon SH

Externally Adjustable Dynamic Self Balancing Valve

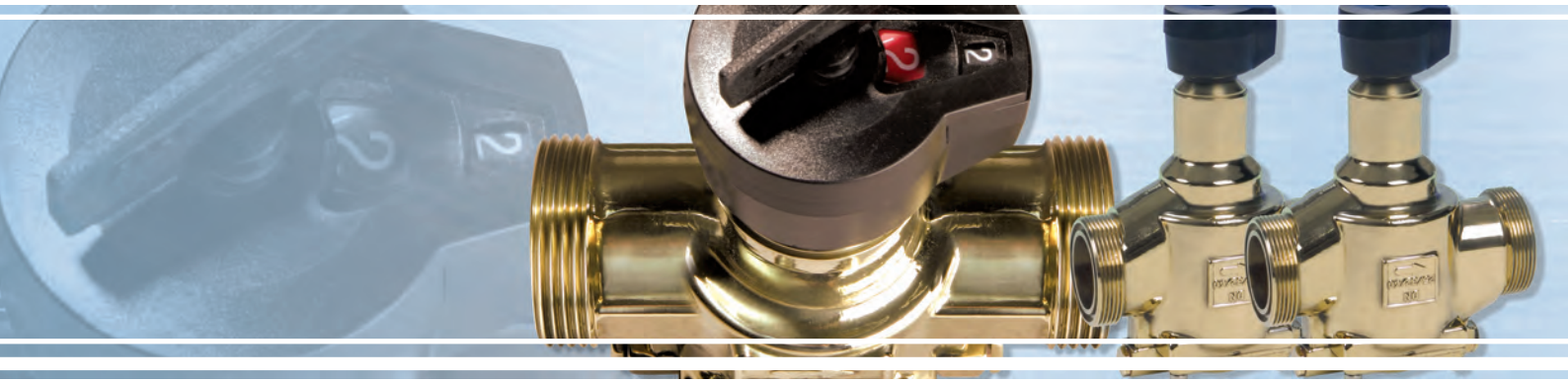

The FlowCon SH series of valves are dynamic flow controls which automatically limit the rate of flow to a pre-set, adjustable maximum.

Used as automatic/dynamic hydraulic balancing valves in multi circuit HVAC systems the more common applications include multiple fan coils, radiators and heat pumps. They can also be used in limiting the flow to individual heat exchangers or domestic water tanks.

Due to the fact that the FlowCon SH valves are externally adjustable, the desired maximum flow rate can be easily changed while the system is operating.

Features and Benefits

- **Automatic flow control,** balance is achieved automatically eliminating the need for manual balancing devices.
- **Easy flow rate setting selection,** determined by one flow rate table without the need of external measurements.
- **Easy adjustment** without disturbing the balance in the rest of the system.
- **51 distinct flow rate settings** per valve size and control range.
- **Accuracy:** Greatest of either ±5% of controlled flow rate or ±2% of maximum flow rate.
- **Tamper-proof,** adjustment unit is being operated by means of special FlowCon key.
- **Pressure/temperature measurement plugs** available for verifying operating pressure differential range.
- **Double union end connection** with a wide selection of end fittings, or **double flange connection** for ease of installation.

Adjustment

The internal mechanism is adjusted by an operation key which also turns the display mechanism. The numeric display shows two scales; one black reflecting full turns numbered 1 through 6, and one red reflecting tenths of full turns numbered 0 through 9. The number of turns reflects the flow rate selected (pls. see specific tech note for exact flow rates and settings).

After the flow rate is set, the valve automatically registers the system pressure conditions and adjusts its orifice area to limit the flow rate to the selected maximum. As system pressure conditions change, the valve will automatically adjust to maintain the selected flow rate. This eliminates the need to know exactly the distribution of pressure within a system.

Because of this dynamic reacting feature, one or more of the valves in the system can be re-adjusted without upsetting the other circuits.

The flow rate through the valve can be verified by reading the pressure differential across the valve. The pressure test ports can be supplied with optional pressure/temperature test plugs for connecting conventional mechanical gauges or electronic sensors.

Principle of Operation

The FlowCon SH valves contain a diaphragm component mounted on a counter-acting spring which adjusts the pressure differential across a pre-set valve opening. The combined components operate very similar to two valves in series, where one is a pressure differential regulator and one an adjustable orifice. This is illustrated below.

Principle of Construction

On the below drawings P1 and P3 are system pressure, P1÷P3 is the total pressure drop across the valve. P2 is set by the diaphragm acting in reaction to P1 in the lower diaphragm chamber. Interacting with the spring, P1÷P2 remains constant, keeping a constant ΔP across the orifice areas. The result is a constant flow rate through the valve, independent of pressure fluctuations.

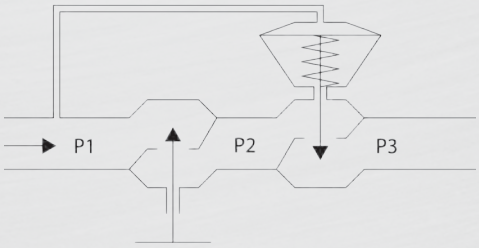

Installation

Contrary to traditional static balancing systems, dynamic balancing requires no main branch balancing valves. If a FlowCon SH valve is used at each terminal, the total flow rate of the branch will automatically be limited to the sum of the flow rates of the circuits.

The FlowCon SH valve can either be installed in the supply or return line. The valve should be positioned for easy access to the adjustment and pressure measurement devices. Unlike traditional balancing valves, placement of the FlowCon SH does not require lengths of pipe before or after the valve.

End Fittings

The FlowCon SH valves are available with optional union connections with a range of different end fittings. The end fittings are available in any combination of size and standard. Larger sizes are for flange connection (pls. see tech notes for further information).

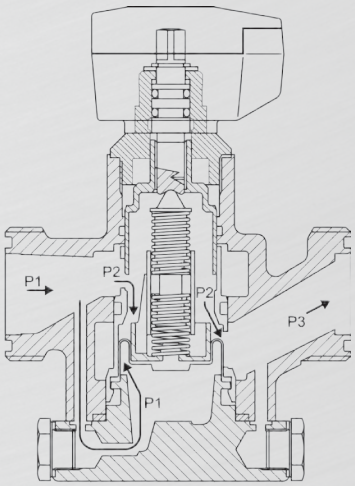

Flow Verification

Optional pressure/temperature test plugs are available for verifying the differential pressure across each FlowCon SH valve. They are fitted into 1/4'' NPT female threaded ports. With the p/t plugs fitted, a pressure differential reading across the valve can be taken.

Flow Rate Setting

For adjusting the flow rate of the FlowCon SH valves use the special designed key (FlowCon part no. ACC0001). As an example, a micrometer setting at 2.4 corresponds to a flow rate of 0.29 l/sec for the valve in size 15/20/25.

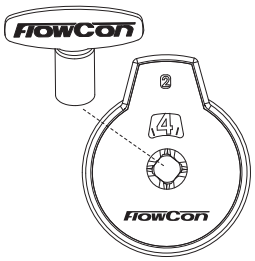

Technical Data

For further information please see FlowCon tech note. For latest updates please see ***www.flowcon.com.***

			SH1 DN15/20/25	SH2 DN25/32/40	SH3 DN50/65/80			SH4 DN80/100			SH5 DN125/150	
Pressure Differential		(kPaD)	33-300	33-300	35-400	35-400	80-400	35-400	60-400		35-400	60-400
		(psid)	4.8-44	4.8-44	5.1-58	5.1-58	11.6-58	5.1-58	8.7-58		5.1-58	8.7-58
Flow Rate		(l/sec)	0.075-0.70	0.11-1.95	1.48-4.16	2.57-7.15	3.55-9.88	3.49-9.38	4.73-14.2	3.68-20.2	6.48-23.3	7.10-29.5
		(GPM)	1.20-11.1	1.70-30.9	23.4-66.0	40.7-113	56.3-157	55.4-149	75.0-225	58.3-320	103-369	113-468
Static Pressure		(kPa)	2500		4000							
		(psi)	360		580							
Temperature Rating (media / ambient)		(ºC)	-20 to +120 / -10 to +54									
		(ºF)	-4 to +248 / +14 to +131									
Pressure Drop Data			NOTE: For pump head calculations, add the minimum pressure differential for the index circuit to the other components pressure losses (i.e. valves, coil, etc.)									
Valve	(Kv-value)	(m^3/hr)	4.2	11.6	24.0	39.5		58.3		89.0	132,3	
	(Cv-value)	(GPM)	4.9	13.5	27.8	45.8		67.6		103.2	153.5	

FlowCon SH 15-40mm

Adjustable Dynamic Self Balancing Valve

SPECIFICATIONS

Pressure rating:	2500 kPa / 360 psi
Temperature rating, media:	-20°C to +120°C / -4°F to +248°F
Material:	
- Diaphragm:	Hydrogenated acrylonitrile-butadiene-rubber
- Body:	Forged brass ASTM CuZn40Pb2
- Union end connections:	Brass alloy ISO or NPT
- O-rings:	EPDM
- Internal components:	Polysylphone (SH1) Poly-vinyl-iden-fluoride (SH2)
Body tappings:	1/4” NPT
Maximum close off pressure:	600 kPa / 87 psi
Maximum operational ΔP:	300 kPaD / 44 psid
Flow rate range:	0.075-1.95 l/sec

DIMENSIONS AND WEIGHTS (NOMINAL) (measured in mm unless noted)

Model no.	Valve size	L	H1	H2	End connections C[1]			Weight (kgs.) w/o end conn.
					ISO Female	ISO Male	Sweat	
SH.1.1	15	108.0	89.9	58.9	22	25	20	1.8
	20				22	25	20	
	25				N/A	39	22	
SH.2.1	25	149.1	140.0	66.0	35	40	34	4.5
	32				33	40	37	
	40				33	42	N/A	

Note 1: Add end connection length to body length.

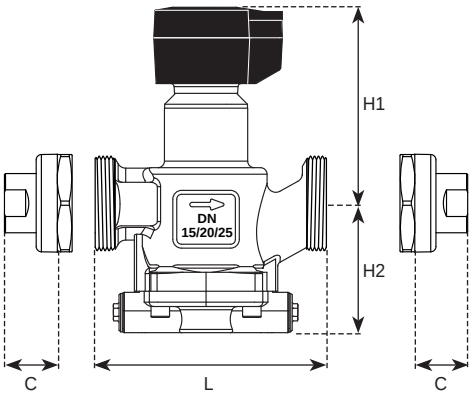

FLOW RATE TABLE

Model no.	Valve size		Control range		Minimum setting			Maximum setting			Shut-off leakage
	mm	inch	kPaD	psid	l/sec	l/hr	GPM	l/sec	l/hr	GPM	
SH.1.1	15	1/2”	33-300	4.8-44	0.0750	270	1.20	0.700	2520	11.1	Leakage<0.05% of Kvs Kvs=4.2 m^3/hr
	20	3/4”									
	25	1”									
SH.2.1	25	1”	33-300	4.8-44	0.110	396	1.70	1.95	7020	30.9	Leakage<0.05% of Kvs Kvs=11.6 m^3/hr
	32	1 1/4”									
	40	1 1/2”									

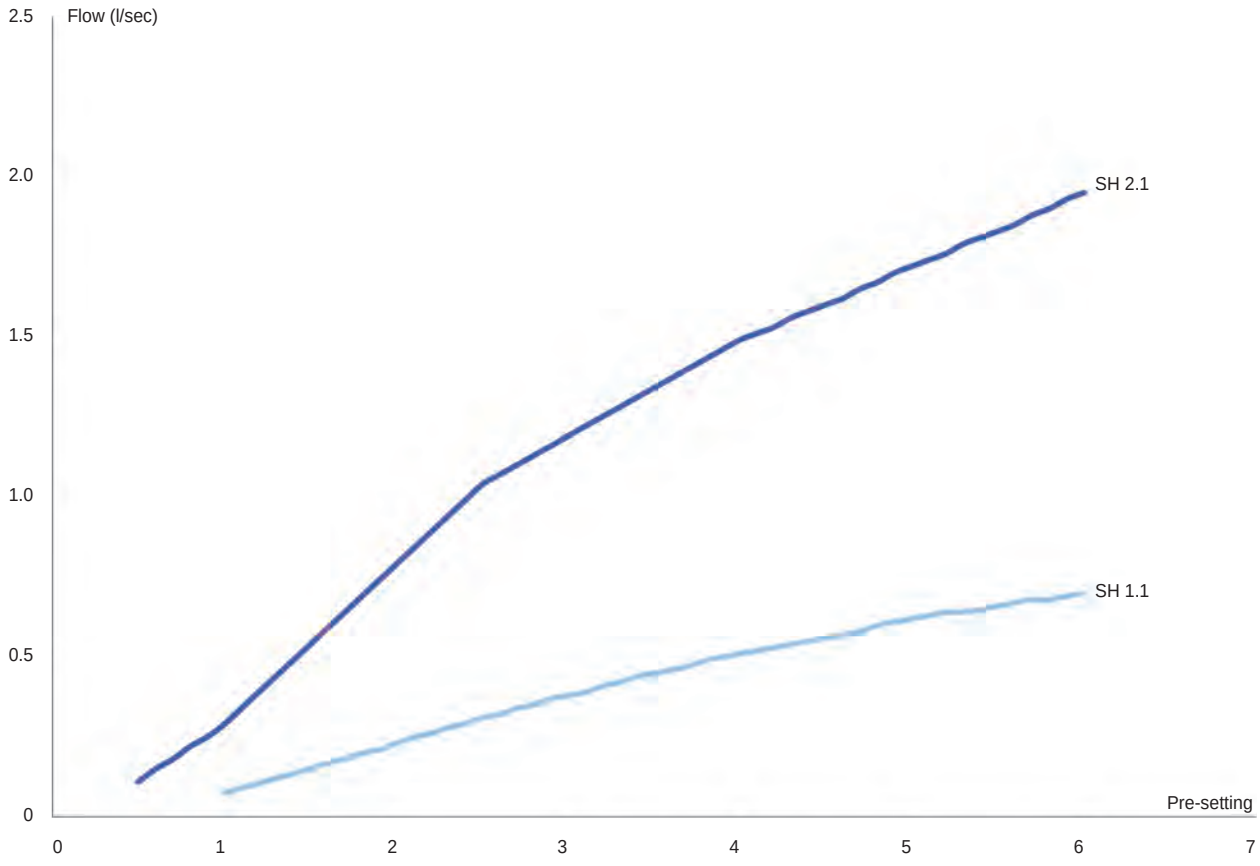

MODEL NUMBER SELECTION

SH.____.__1__.____.____.____.____

Insert body size:
1=15-25mm 2=25-40mm

Insert dP control range:
1=standard

Insert p/t plug requirements:
P=taps plugged (standard) B=pressure/temperature plugs

Insert inlet x outlet union end connections:

Body size	Female threaded	Male treaded	Sweat
Union end 15-25mm, 1/2”-1”	E=15mm=1/2” F=20mm=3/4”	H=15mm=1/2” I=20mm=3/4” J=25mm=1”	K=15mm L=18mm M=22mm
Union end 25-40mm, 1”-1 1/2”	G=25mm=1” P=32mm=1 1/4” Q=40mm=1 1/2”	J=25mm=1” S=32mm=1 1/4” T=40mm=1 1/2”	N=28mm W=35mm

Insert connections standard:
I=ISO N=NPT -Leave it blank if no connection required

Example: SH.1.1.P.F.F.I=SH 15-25mm body, taps plugged and with 20mm ISO female threaded end connections.

FLOW RATE SETTING - VALVE SIZE DN15-DN40

Flow rate						Setting
Valve size: DN15-DN25 · 1/2”-1”			Valve size: DN25-DN40 · 1”-1 1/2”			
33-300 kPaD · 4.8-44 psid			33-300 kPaD · 4.8-44 psid			
SH.1.1			SH.2.1			
l/sec	l/hr	GPM	l/sec	l/hr	GPM	
-	-	-	0.11	396	1.7	0.5
-	-	-	0.15	526	2.3	0.6
-	-	-	0.18	655	2.9	0.7
-	-	-	0.22	785	3.5	0.8
-	-	-	0.25	914	4.0	0.9
0.075	270	1.2	0.29	1044	4.6	1.0
0.090	324	1.4	0.34	1224	5.4	1.1
0.105	378	1.7	0.39	1404	6.2	1.2
0.120	432	1.9	0.44	1584	7.0	1.3
0.135	486	2.1	0.49	1764	7.8	1.4
0.15	540	2.4	0.54	1944	8.6	1.5
0.17	598	2.6	0.59	2124	9.4	1.6
0.18	655	2.9	0.64	2304	10.1	1.7
0.20	713	3.1	0.69	2484	10.9	1.8
0.21	770	3.4	0.74	2664	11.7	1.9
0.23	828	3.6	0.79	2844	12.5	2.0
0.25	886	3.9	0.84	3024	13.3	2.1
0.26	943	4.2	0.89	3204	14.1	2.2
0.28	1001	4.4	0.94	3384	14.9	2.3
0.29	1058	4.7	0.99	3564	15.7	2.4
0.31	1116	4.9	1.04	3744	16.5	2.5
0.32	1166	5.1	1.07	3852	17.0	2.6
0.34	1217	5.4	1.10	3960	17.4	2.7
0.35	1267	5.6	1.13	4068	17.9	2.8
0.37	1318	5.8	1.16	4176	18.4	2.9
0.38	1368	6.0	1.19	4284	18.9	3.0
0.39	1418	6.2	1.22	4392	19.3	3.1
0.41	1469	6.5	1.25	4500	19.8	3.2
0.42	1519	6.7	1.28	4608	20.3	3.3
0.44	1570	6.9	1.31	4716	20.8	3.4
0.45	1620	7.1	1.34	4824	21.2	3.5
0.46	1663	7.3	1.37	4932	21.7	3.6
0.47	1706	7.5	1.40	5040	22.2	3.7
0.49	1750	7.7	1.43	5148	22.7	3.8
0.50	1793	7.9	1.46	5256	23.1	3.9
0.51	1836	8.1	1.49	5364	23.6	4.0
0.52	1872	8.2	1.51	5443	24.0	4.1
0.53	1908	8.4	1.53	5522	24.3	4.2
0.54	1944	8.6	1.56	5602	24.7	4.3
0.55	1980	8.7	1.58	5681	25.0	4.4
0.56	2016	8.9	1.60	5760	25.4	4.5
0.57	2059	9.1	1.62	5846	25.7	4.6
0.58	2102	9.3	1.65	5933	26.1	4.7
0.60	2146	9.4	1.67	6019	26.5	4.8
0.61	2189	9.6	1.70	6106	26.9	4.9
0.62	2232	9.8	1.72	6192	27.3	5.0
0.63	2261	10.0	1.74	6271	27.6	5.1
0.64	2290	10.1	1.76	6350	28.0	5.2
0.64	2318	10.2	1.79	6430	28.3	5.3
0.65	2347	10.3	1.81	6509	28.7	5.4
0.66	2376	10.5	1.83	6588	29.0	5.5
0.67	2405	10.6	1.85	6674	29.4	5.6
0.68	2434	10.7	1.88	6761	29.8	5.7
0.68	2462	10.8	1.90	6847	30.1	5.8
0.69	2491	11.0	1.93	6934	30.5	5.9
0.70	2520	11.1	1.95	7020	30.9	6.0

Accuracy: Greatest of either ±5% of controlled flow rate or ±2% of maximum flow rate.

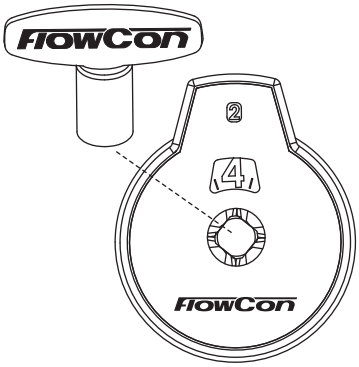

Use the special key (FlowCon part no. ACC0001) for micrometer setting.

A micrometer setting at 2.4 as illustrated above corresponds to a flow rate of:

0.29 l/sec (for valve size DN15/20/25)
0.99 l/sec (for valve size DN25/32/40)

ACCESSORIES

- Adjustment key, ACC0001
- Pressure/temperature plugs 1/4”, 2 x ACC00101

GENERAL SPECIFICATIONS

1. DYNAMIC BALANCING VALVES - FLOWCON SH

1.1. Contractor shall install dynamic balancing valves where indicated in drawings.
1.2. Valve shall consist of dynamic, adjustable flow limiting device.
1.3. Flow limiting device shall be externally adjustable with the valve in-line and the system in operation.

2. VALVE HOUSING

2.1. Valve housing shall consist of forged brass ASTM CuZn40Pb2, rated at no less than 2500 kPa static pressure and +120°C.
2.2. Valve housing shall be permanently marked to show direction of flow.
2.3. Valve housing shall be double union construction with a range of pipe connections available for the appropriate pipe size.
2.4. Optional dual pressure/temperature test plugs for verifying accuracy of flow performance shall be available for all valve sizes.

3. FLOW REGULATOR / AUTOMATIC BALANCING UNIT

3.1. Flow regulation unit shall be manufactured of polysylphone / poly-vinyl-iden-fluoride (depending on size) and hydrogenated acrylonitrile-butadiene-rubber.
3.2. Flow regulation unit shall be accessible for maintenance.
3.3. Housing shall be configured for external flow regulation unit adjustment to 56 different flow rates and shall be capable of controlling flow within greatest of either ±5% of rated rated flow or ±2% of maximum rated flow.

2-WAY APPLICATION AND SCHEMATIC EXAMPLE

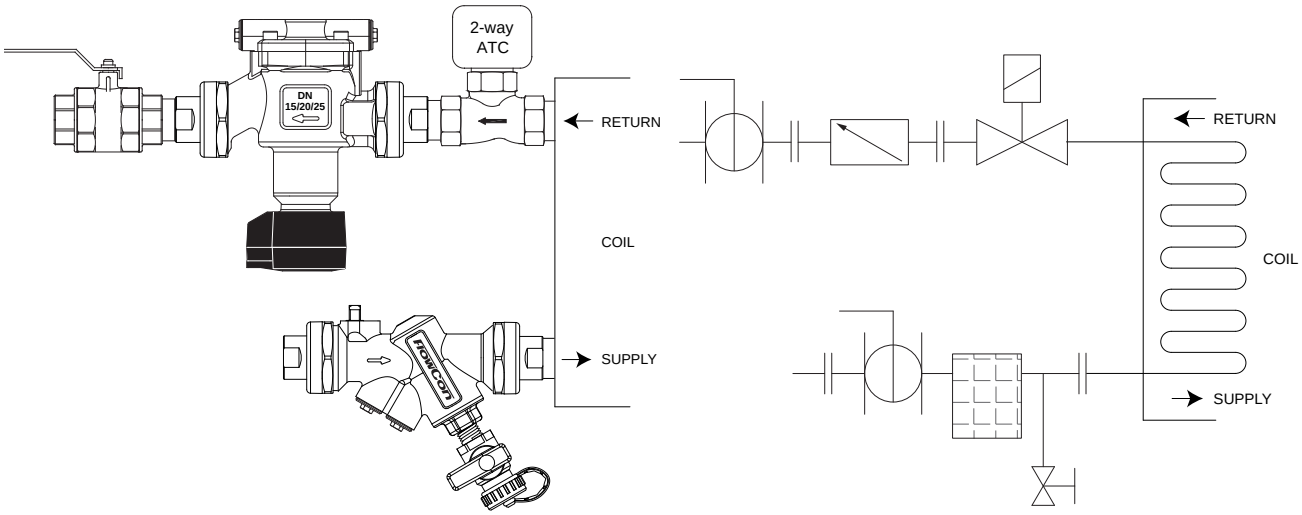

3-WAY APPLICATION AND SCHEMATIC EXAMPLE

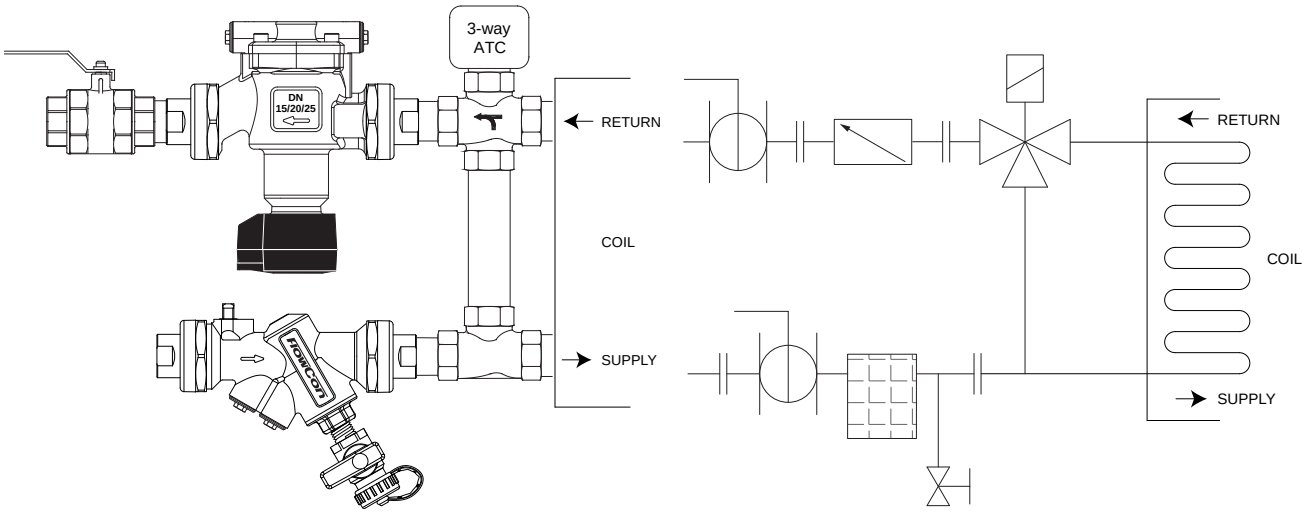

UPDATES

For latest updates please see www.flowcon.com

FlowCon SH 50-150mm

Adjustable Dynamic Self Balancing Valve

SPECIFICATIONS

Pressure rating:	4000 kPa / 580 psi
Temperature rating, media:	-20°C to +120°C / -4°F to +248°F
Material:	
- Diaphragm:	Hydrogenated acrylonitrile-butadiene-rubber
- Body:	Ductile iron, ASTM A536-65T, class 60-45-18
- O-rings:	EPDM
- Internal components:	Stainless steel
End connection:	Universal flange connections which can be used with both ISO and ANSI Flanges and mounting kits are not supplied by FlowCon[1]
Body tappings:	1/4” ISO
Maximum close off pressure:	600 kPa / 87 psi
Maximum operational ΔP:	400 kPaD / 58 psid
Flow rate range:	1.48-29.5 l/sec

Note1: 2x16mm studs and 4x16mm bolts with nuts are supplied with SH.3.x.x.x.

DIMENSIONS AND WEIGHTS (NOMINAL) (measured in mm unless noted)

Model no.	Valve size	L	H1	H2	Weight (kgs.)
SH.3.X	50	224	152	95	14[2]
	65				
	80				
SH.4.X	80	320	196	135	30
	100				31 (SH.4.3 only)
SH.5.X	125	422	244	180	60
	150				

Note 2: Including studs, bolts and nuts provided with valve.

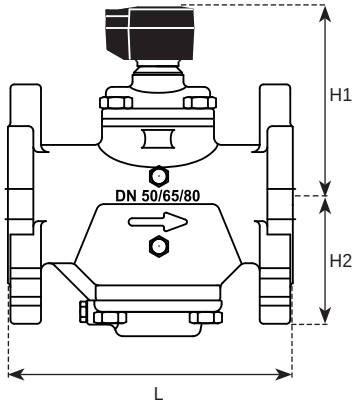

MODEL NUMBER SELECTION

SH . ____ . ____ . __B__

Insert valve body size:
3=50-80mm 4=80-100mm 5=125-150mm

Insert dP control range:
0=35-400 kPaD, 5.1-58 psid (SH.3 only)
1=35-400 kPaD, 5.1-58 psid
2=60/80-400 kPaD, 8.7/11.6-58 psid
3=60-400 kPaD, 8.7-58 psid (SH.4 only)

Insert p/t plug requirements:
B=p/t plugs (standard)

Example: SH.3.1.B=SH 50-80mm body for 35-400 kPaD with p/t plugs.

FLANGE MATCH SH HOUSING

Model no.	Flange size (inch)	ASME B16.5 weld neck flanges		ASME B16.5 slip on flanges		Flange size (mm)	EN1092-1[3]				EN1092-1[4]			
		Class 150	Class 300	Class 150	Class 300		PN10	PN16	PN25	PN40	PN10	PN16	PN25	PN40
SH.3.x	2	-	✓	-	✓	50	✓	✓	✓	✓	✓	✓	✓	✓
	2 1/2	✓	✓	✓	✓	65	✓	✓	✓	✓	✓	✓	✓	✓
	3	✓	✓	-	-	80	✓	✓	✓	✓	-	-	-	-
SH.4.x	3	✓	✓	✓	✓	80	✓	✓	✓	✓	✓	✓	✓	✓
	4	✓	✓	-	-	100	✓	✓	✓	✓	-	-	-	-
SH.5.x	5	✓	✓	✓	✓	125	✓	✓	✓	✓	✓	✓	✓	✓
	6	✓	-	-	-	150	✓	✓	✓	✓	-	-	-	-

Note 3: Type 02 and 35/36/37 (loose plate flange with weldring neck / pressed collar with long neck / pressed collar) or
Type 04 and 34 (loose plate flange with weld-neck collar) or
Type 11 with flange facing A/B (weld-neck flange with flat face or raised face).

Note 4: Type 12 with flange facing A/B (hubbed slip-on flange with flat face or raised face).

FLOW RATE TABLE

Model no.	Valve size		Control range		Minimum setting			Maximum setting			Shut-off leakage
	mm	inch	kPaD	psid	l/sec	l/hr	GPM	l/sec	l/hr	GPM	
SH.3.0	50	2”	35-400	5.1-58	1.48	5310	23.4	4.16	15000	66.0	Leakage<0.2% of Kvs, Kvs=24 m^3/hr
	65	2 1/2”									
	80	3”									
SH.3.1	50	2”	35-400	5.1-58	2.57	9240	40.7	7.15	25700	113	Leakage<0.2% of Kvs, Kvs=39.5 m^3/hr
	65	2 1/2”									
	80	3”									
SH.3.2	60	2”	80-400	11.6-58	3.55	12800	56.3	9.88	35600	157	
	65	2 1/2”									
	80	3”									
SH.4.1	80	3”	35-400	5.1-58	3.49	12600	55.4	9.38	33800	149	Leakage<0.2% of Kvs, Kvs=58.3 m^3/hr
	100	4”									
SH.4.2	80	3”	60-400	8.7-58	4.73	17000	75.0	14.2	51000	225	
	100	4”									
SH.4.3	80	3”	60-400	8.7-58	3.68	13300	58.3	20.2	72700	320	Leakage<0.2% of Kvs, Kvs=89 m^3/hr
	100	4”									
SH.5.1	125	5”	35-400	5.1-58	6.48	23300	103	23.3	83800	369	Leakage<0.2% of Kvs, Kvs=132,3 m^3/hr
	150	6”									
SH.5.2	125	5”	60-400	8.7-58	7.10	25600	113	29.5	106000	468	
	150	6”									

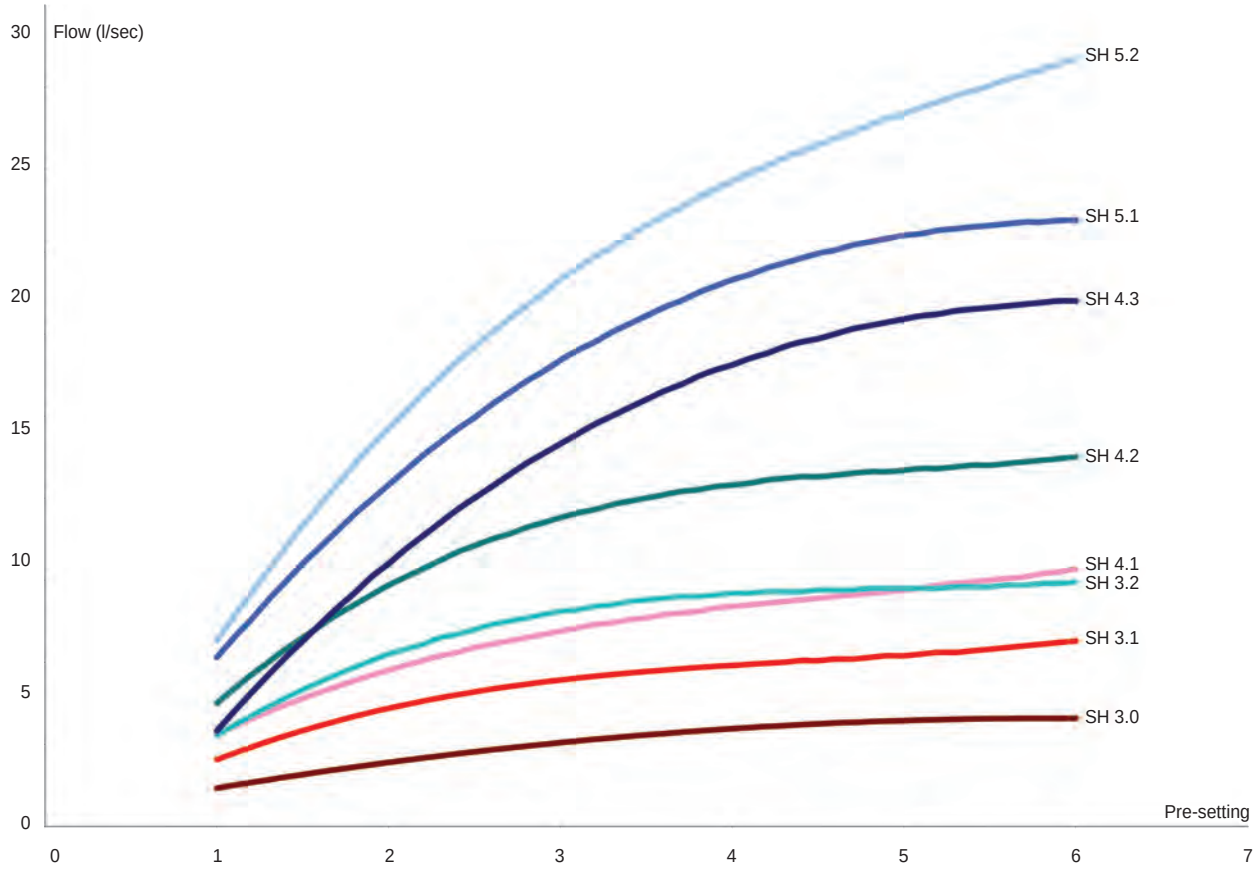

FLOW RATE SETTING - VALVE SIZE DN50-DN80

Flow rate									Setting
Valve size: DN50-DN80 · 2”-3”									
35-400 kPaD · 5.1-58 psid			35-400 kPaD · 5.1-58 psid			80-400 kPaD · 11.6-58 psid			
SH.3.0			SH.3.1			SH.3.2			
l/sec	l/hr	GPM	l/sec	l/hr	GPM	l/sec	l/hr	GPM	
1.48	5310	23.4	2.57	9240	40.7	3.55	12800	56.3	1.0
1.58	5700	25.1	2.81	10100	44.6	3.85	13900	61.0	1.1
1.69	6080	26.8	3.05	11000	48.4	4.13	14900	65.6	1.2
1.79	6460	28.5	3.27	11800	51.9	4.41	15900	69.9	1.3
1.90	6830	30.1	3.48	12500	55.3	4.67	16800	74.0	1.4
2.00	7190	31.7	3.69	13300	58.5	4.92	17700	78.0	1.5
2.09	7540	33.2	3.88	14000	61.5	5.16	18600	81.8	1.6
2.19	7880	34.7	4.06	14600	64.3	5.38	19400	85.4	1.7
2.28	8210	36.2	4.23	15200	67.0	5.60	20200	88.8	1.8
2.37	8540	37.6	4.39	15800	69.6	5.81	20900	92.1	1.9
2.46	8860	39.0	4.54	16300	72.0	6.01	21600	95.3	2.0
2.55	9170	40.4	4.68	16900	74.3	6.19	22300	98.2	2.1
2.63	9470	41.7	4.82	17300	76.4	6.37	22900	101	2.2
2.71	9770	43.0	4.94	17800	78.4	6.54	23600	104	2.3
2.79	10100	44.3	5.06	18200	80.3	6.70	24100	106	2.4
2.87	10300	45.5	5.17	18600	82.1	6.86	24700	109	2.5
2.94	10600	46.7	5.28	19000	83.7	7.00	25200	111	2.6
3.02	10900	47.9	5.37	19300	85.2	7.14	25700	113	2.7
3.09	11100	49.0	5.47	19700	86.7	7.27	26200	115	2.8
3.16	11400	50.1	5.55	20000	88.0	7.40	26600	117	2.9
3.22	11600	51.1	5.63	20300	89.3	7.52	27100	119	3.0
3.29	11800	52.1	5.70	20500	90.5	7.63	27500	121	3.1
3.35	12100	53.1	5.77	20800	91.6	7.74	27900	123	3.2
3.41	12300	54.0	5.84	21000	92.6	7.84	28200	124	3.3
3.46	12500	54.9	5.90	21200	96.5	7.94	28600	126	3.4
3.52	12700	55.8	5.95	21400	94.4	8.03	28900	127	3.5
3.57	12900	56.6	6.01	21600	95.3	8.12	29200	129	3.6
3.62	13000	57.4	6.06	21800	96.1	8.20	29500	130	3.7
3.67	13200	58.2	6.10	22000	96.8	8.28	29800	131	3.8
3.72	13400	58.9	6.15	22100	97.5	8.36	30100	133	3.9
3.76	13500	59.6	6.19	22300	98.2	8.44	30400	134	4.0
3.80	13700	60.3	6.23	22400	98.9	8.51	30600	135	4.1
3.84	13800	60.9	6.27	22600	99.5	8.58	30900	136	4.2
3.88	14000	61.5	6.31	22700	100	8.65	31100	137	4.3
3.91	14100	62.0	6.35	22900	101	8.72	31400	138	4.4
3.94	14200	62.5	6.39	23000	101	8.78	31600	139	4.5
3.97	14300	63.0	6.42	23100	102	8.85	31900	140	4.6
4.00	14400	63.4	6.46	23300	102	8.91	32100	141	4.7
4.03	14500	63.9	6.50	23400	103	8.98	32300	142	4.8
4.05	14600	64.2	6.54	23500	104	9.04	32600	143	4.9
4.07	14700	64.6	6.58	23700	104	9.11	32800	144	5.0
4.09	14700	64.9	6.62	23800	105	9.18	33000	146	5.1
4.11	14800	65.1	6.67	24000	106	9.25	33300	147	5.2
4.12	14800	65.3	6.72	24200	107	9.32	33500	148	5.3
4.13	14900	65.5	6.77	24400	107	9.39	33800	149	5.4
1.14	14900	65.7	6.82	24600	108	9.46	34100	150	5.5
4.15	14900	65.8	6.88	24800	109	9.54	34300	151	5.6
4.15	15000	65.9	6.94	25000	110	9.62	34600	153	5.7
4.16	15000	65.9	7.01	25200	111	9.70	34900	154	5.8
4.16	15000	66.0	7.08	25500	112	9.79	35300	155	5.9
4.16	15000	66.0	7.15	25700	113	9.88	35600	157	6.0

Accuracy: Greatest of either ±5% of controlled flow rate or ±2% of maximum flow rate.

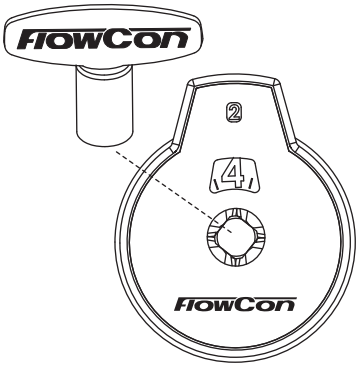

Use the special key (FlowCon part no. ACC0001) for micrometer setting.

A micrometer setting at 2.4 as illustrated above corresponds to a flow rate of:

2.79 l/sec
- (type 0, range 35-400 kPaD)

5.06 l/sec
- (type 1, range 35-400 kPaD)

6.70 l/sec
- (type 2, range 80-400 kPaD)

FLOW RATE SETTING - VALVE SIZE DN80 AND DN100

Flow rate									Setting
Valve size: 80mm, 100mm · 3", 4"									
35-400 kPaD · 5.1-58 psid			60-400 kPaD · 8.7-58 psid			60-400 kPaD · 8.7-58 psid			
SH.4.1			SH.4.2			SH.4.3			
l/sec	l/hr	GPM	l/sec	l/hr	GPM	l/sec	l/hr	GPM	
3.49	12600	55.4	4.73	17000	75.0	3.68	13300	58.3	1.0
3.88	14000	61.6	5.29	19000	83.9	4.42	15900	70.0	1.1
4.26	15300	67.5	5.82	21000	92.3	5.13	18500	81.3	1.2
4.61	16600	73.1	8.33	22800	100	5.82	21000	92.3	1.3
4.94	17800	78.4	6.82	24500	108	6.50	23400	103	1.4
5.26	18900	83.4	7.28	26200	115	7.15	25700	113	1.5
5.56	20000	88.2	7.72	27800	122	7.78	28000	123	1.6
5.84	21000	92.7	8.14	29300	129	8.39	30200	133	1.7
6.11	22000	96.9	8.54	30700	135	8.99	32400	142	1.8
6.36	22900	101	8.91	32100	141	9.56	34400	152	1.9
6.60	23800	105	9.27	33400	147	10.1	36400	160	2.0
6.82	24600	108	9.61	34600	152	10.7	38400	169	2.1
7.03	25300	112	9.93	35700	157	11.2	40200	177	2.2
7.23	26000	115	10.2	36800	162	11.7	42100	185	2.3
7.41	26700	117	10.5	37800	167	12.2	43800	193	2.4
7.58	27300	120	10.8	38800	171	12.6	45500	200	2.5
7.73	27800	123	11.0	39700	175	13.1	47100	207	2.6
7.88	28400	125	11.3	40500	179	13.5	48700	214	2.7
8.01	28800	127	11.5	41300	182	13.9	50200	221	2.8
8.14	29300	129	11.7	42000	185	14.3	51600	227	2.9
8.25	29700	131	11.9	42700	188	14.7	53000	233	3.0
8.35	30100	132	12.0	43400	191	15.1	54300	239	3.1
8.45	30400	134	12.2	43900	194	15.4	55600	245	3.2
8.53	30700	135	12.4	44500	196	15.8	56800	250	3.3
8.61	31000	137	12.5	45000	198	16.1	58000	255	3.4
8.68	31300	138	12.6	45500	200	16.4	59100	260	3.5
8.74	31500	139	12.7	45900	202	16.7	60200	265	3.6
8.80	31700	140	12.9	46300	204	17.0	61200	269	3.7
8.85	31900	140	13.0	46700	206	17.3	62100	274	3.8
8.90	32000	141	13.1	47000	207	17.5	63000	278	3.9
8.93	32200	142	13.1	47300	208	17.8	63900	281	4.0
8.97	32300	142	13.2	47600	210	18.0	64700	285	4.1
9.00	32400	143	13.3	47800	211	18.2	65500	218	4.2
9.03	32500	143	13.4	48100	212	18.4	66200	292	4.3
9.05	32600	144	13.4	48300	213	18.6	66900	295	4.4
9.07	32600	144	13.5	48500	214	18.8	67600	297	4.5
9.09	32700	144	13.5	48700	214	18.9	68200	300	4.6
9.10	32800	144	13.6	48800	215	19.1	68700	303	4.7
9.12	32800	145	13.6	49000	216	19.2	69200	305	4.8
9.13	32900	145	13.7	49200	217	19.4	69700	307	4.9
9.15	32900	145	13.7	49300	217	19.5	70200	309	5.0
9.16	33000	145	13.7	49500	218	19.6	70600	311	5.1
9.18	33000	146	13.8	49600	219	19.7	70900	312	5.2
9.19	33100	146	13.8	49800	219	19.8	71300	314	5.3
9.21	33200	146	13.9	49900	220	19.9	71600	315	5.4
9.23	33200	146	13.9	50100	221	20.0	71900	316	5.5
9.25	33300	147	14.0	50200	221	20.0	72100	317	5.6
9.28	33400	147	14.0	50400	222	20.1	72300	318	5.7
9.31	33500	148	14.1	50600	223	20.1	72500	319	5.8
9.34	33600	148	14.1	50800	224	20.2	72600	320	5.9
9.38	33800	149	14.2	51000	225	20.2	72700	320	6.0

Accuracy: Greatest of either ±5% of controlled flow rate or ±2% of maximum flow rate.

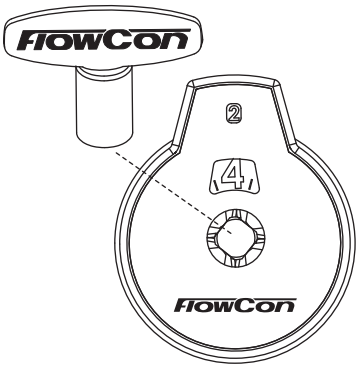

Use the special key (FlowCon part no. ACC0001) for micrometer setting.

A micrometer setting at 2.4 as illustrated above corresponds to a flow rate of:

7.41 l/sec
- (type 1, range 35-400 kPaD)

10.5 l/sec
- (type 2, range 60-400 kPaD)

12.2 l/sec
- (type 3, range 60-400 kPaD)

FLOW RATE SETTING - VALVE SIZE DN125 AND DN150

Flow rate						Setting
Valve size: DN125 and DN150 · 5” and 6”						
35-400 kPaD · 5.1-58 psid			60-400 kPaD · 8.7-58 psid			
SH.5.1			SH.5.2			
l/sec	l/hr	GPM	l/sec	l/hr	GPM	
6.48	23300	103	7.10	25600	113	1.0
7.24	26100	115	8.06	29000	128	1.1
7.98	28700	127	8.98	32300	142	1.2
8.69	31300	138	9.87	35500	157	1.3
9.39	33800	149	10.7	38600	170	1.4
10.1	36200	160	11.6	41600	183	1.5
10.7	38600	170	12.4	44500	196	1.6
11.4	40900	180	13.1	47300	208	1.7
12.0	43100	190	13.9	50000	220	1.8
12.6	45200	199	14.6	52600	232	1.9
13.1	47300	208	15.3	55100	243	2.0
13.7	49300	217	16.0	57500	253	2.1
14.2	51200	226	16.6	59800	264	2.2
14.7	53100	234	17.2	62100	274	2.3
15.3	54900	242	17.8	64200	283	2.4
15.7	56600	250	18.4	66300	292	2.5
16.2	58300	257	19.0	68300	301	2.6
16.6	59900	264	19.5	70200	309	2.7
17.1	61500	271	20.0	72100	317	2.8
17.5	63000	227	20.5	73800	325	2.9
17.9	64400	284	21.0	75500	333	3.0
18.3	65800	290	21.4	77200	340	3.1
18.6	67100	295	21.9	78700	347	3.2
19.0	68300	301	22.3	80200	353	3.3
19.3	69500	306	22.7	81700	360	3.4
19.6	70700	311	23.1	83100	366	3.5
19.9	71700	316	23.4	84400	372	3.6
20.2	72800	321	23.8	85700	377	3.7
20.5	73800	325	24.1	86900	383	3.8
20.7	74700	329	24.5	88100	388	3.9
21.0	75600	333	24.8	89200	393	4.0
21.2	76400	337	25.1	90300	398	4.1
21.4	77200	340	25.4	91400	403	4.2
21.6	77900	343	25.7	92400	407	4.3
21.8	78600	346	25.9	93400	411	4.4
22.0	79200	349	26.2	94300	415	4.5
22.2	79800	352	26.5	95200	420	4.6
22.3	80300	354	26.7	96100	423	4.7
22.5	80800	356	26.9	97000	427	4.8
22.6	81300	358	27.2	97800	431	4.9
22.7	81700	360	27.4	98600	435	5.0
22.8	82100	362	27.6	99400	438	5.1
22.9	82400	363	27.8	100000	442	5.2
23.0	82700	364	28.1	101000	445	5.3
23.0	83000	366	28.3	102000	448	5.4
23.1	83200	367	28.5	102000	452	5.5
23.2	83400	367	28.7	103000	455	5.6
23.2	83500	368	28.9	104000	458	5.7
23.2	83600	368	29.1	105000	461	5.8
23.3	83700	369	29.3	105000	465	5.9
23.3	83800	369	29.5	106000	468	6.0

Accuracy: Greatest of either ±5% of controlled flow rate or ±2% of maximum flow rate.

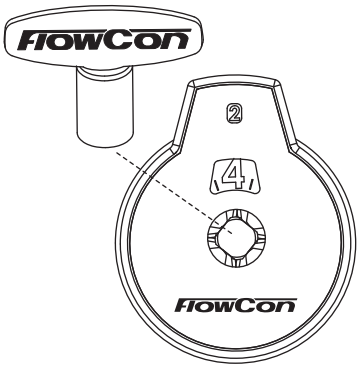

Use the special key (FlowCon part no. ACC0001) for micrometer setting.

A micrometer setting at 2.4 as illustrated above corresponds to a flow rate of:

15.3 l/sec (type 1, range 35-400 kPaD)

17.8 l/sec (type 2, range 60-400 kPaD)

ACCESSORIES

• Adjustment key: ACC0001 (key for adjusting the flow rate).

GENERAL DESCRIPTION

The SH valve series are dynamic self balancing valves that are pressure independent.

The valve self-adjusts for pressure differential and therefore eliminates the need for manual adjustment according to pressure differential after installation as is required with manual balancing valves.

The valve self-adjusts to prevent exceeding design flow setting even as system pressure differential fluctuates with operation while valve is within its pressure differential control range.

Each valve has 51 different flow settings. The valve is wafer body design for installation between flanges.

GENERAL SPECIFICATIONS

1. DYNAMIC BALANCING VALVES - FLOWCON SH

1.1. Contractor shall install dynamic balancing valves where indicated in drawings.
1.2. Valve shall consist of dynamic, adjustable flow limiting device.
1.3. Flow limiting device shall be externally adjustable with the valve in-line and the system in operation.

2. VALVE HOUSING

2.1. Valve housing shall consist of ductile iron ASTM A536-65T, class 60-45-18, rated at no less than 4000 kPa static pressure and +120°C.
2.2. Valve housing shall be permanently marked to show direction of flow.
2.3. Valve housing shall be for installation between flanges, compatible with ANSI B 16.5 150lb/300lb steel flanges (depending on size) and be compatible to DIN PN10+ flanges according to EN1092-1.
2.4. Dual pressure/temperature test plugs for verifying accuracy of flow performance shall be provided for all valve sizes.

3. FLOW REGULATOR / AUTOMATIC BALANCING UNIT

3.1. Flow regulation unit shall be manufactured of stainless steel and hydrogenated acrylonitrile-butadiene-rubber.
3.2. Flow regulation unit shall be accessible for maintenance.
3.3 Flow regulation unit shall be adjustable with the valve in-line and the system in operation.
3.4. Valve housing shall be configured for external flow regulation unit adjustment to 51 different flow rates and shall be capable of controlling flow with an accuracy of either ±5% of rated flow or ±2% of maximum flow whichever is greatest.
3.5. Identification tags shall be available for all valves; tags shall be indelibly marked with part number, production date and pressure differential range.

2-WAY APPLICATION AND SCHEMATIC EXAMPLE

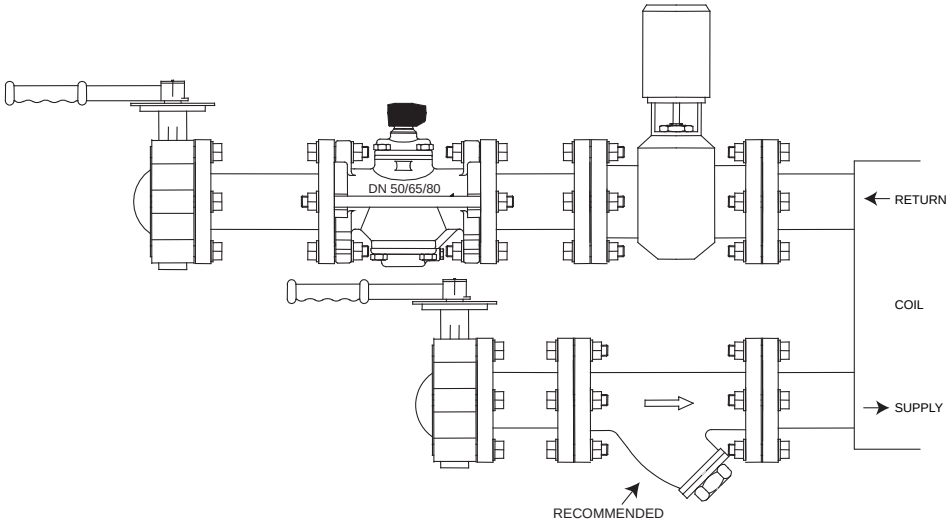

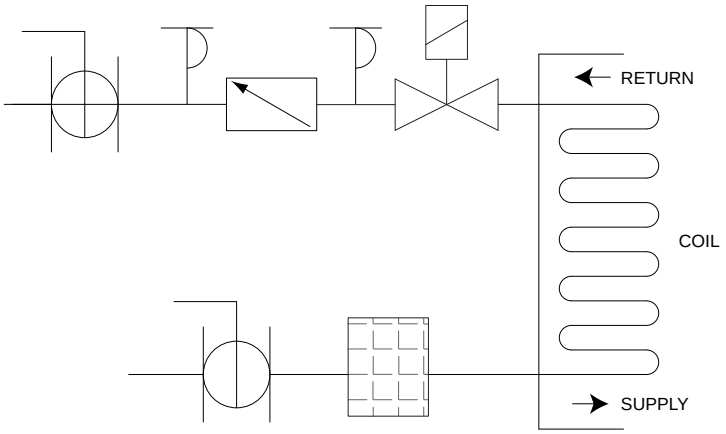

UPDATES

For latest updates please see www.flowcon.com

FlowCon International

FlowCon K

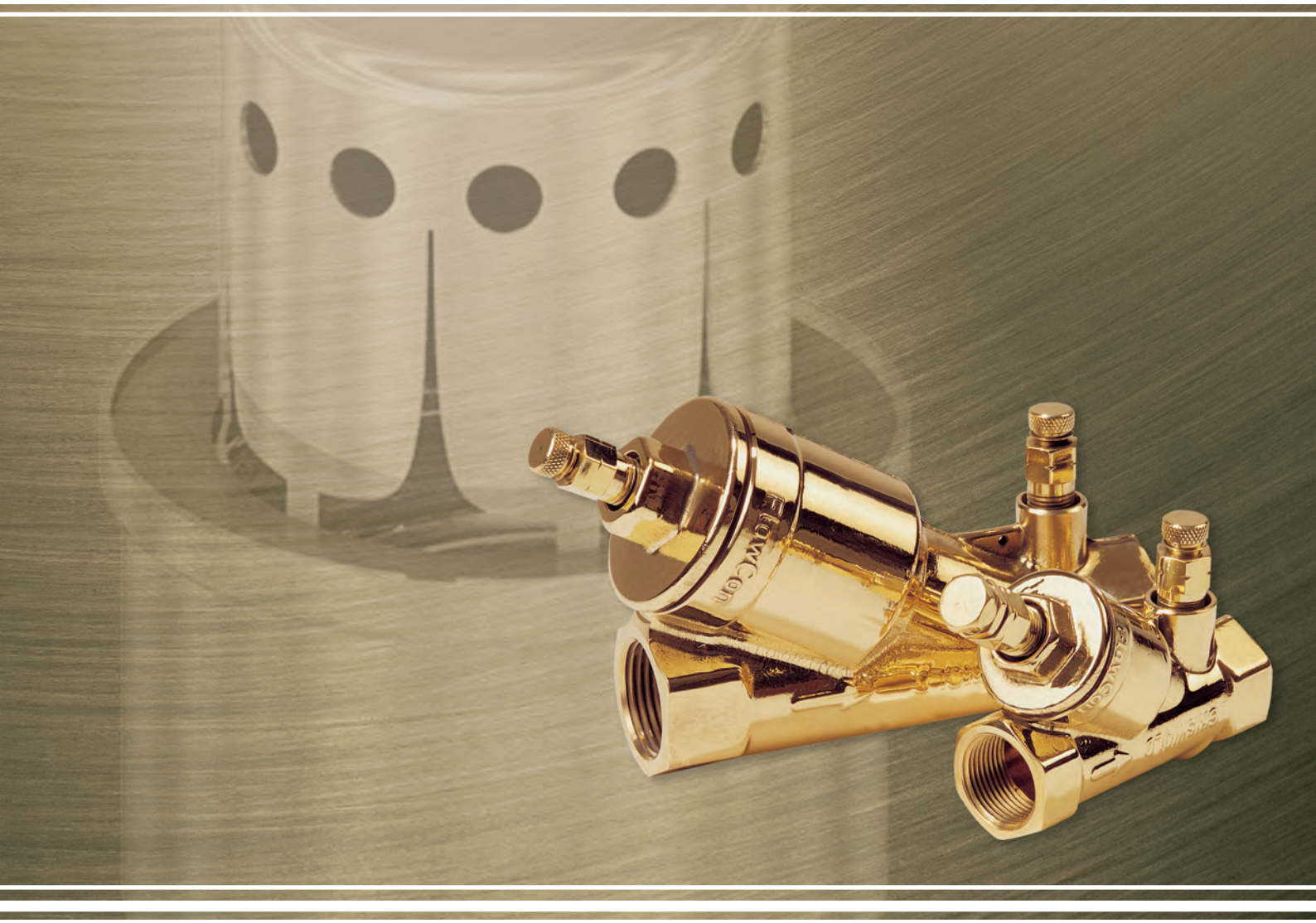

Automatic Flow Control Valve with Pressure Regulation

FlowCon K

Dynamic Flow Control Valve

The FlowCon K series are designed as a constant flow valve which maintains a specific flow rate independent of pressure fluctuations within a hydronic heating or cooling system. FlowCon K is primarily designed for use in terminal balancing.

The flow rate for the application is selected and FlowCon K does the rest, eliminating time consuming and costly manual balancing. Whether the application is air conditioning or heating, terminal unit or branch balancing, constant or modulating flow, the FlowCon K is the most accurate yet flexible way of balancing any hydronic system completely automatic.

Features and Benefits

- **Automatic balancing,** the correct flow rate for each circuit is achieved automatically.
- **Dynamic balancing,** the correct flow rate is maintained as each valve compensates for pressure fluctuations in the system.
- **Elimination of branch or ”partner” balancing valves** (fewer total valves used in each project).
- **Easily accessible cartridge** for flow rate changing or maintenance.
- **Accuracy** of ±5%.
- **Pressure/temperature measurement plugs** for verifying operating pressure differential range.

Selection

In selecting a FlowCon K valve, the following information is needed: 1) flow rate, 2) pressure differential range and 3) pipe size.

1) Flow Rate Selection

In determining the flow rate, it must be decided whether the circuit will be a constant flow or modulating system.

If the valve is being fit into a constant flow system, simply select the flow rate from the Flow Rate Selection Chart (pls. see the catalogue: FlowCon Cartridges) closest to the designed rate. If the valve is being installed in variable flow application (used in series with a modulating control valve), simply select the flow rate closest to the designed maximum flow rate of the circuit. The FlowCon K will then limit the flow to that specific maximum flow rate. Below the maximum, the valve will act as a fixed orifice device adding minimal pressure loss to the system. This allows the modulating valve to have authority up to the maximum flow rate designed for that circuit.

For applications controlling the flow of fluids other than water, the specific gravity, viscosity and operating temperature are needed for proper selection. The cartridges are calibrated for water at approximately 16°C. The flow rate of a cartridge may be influenced by fluids with characteristics other than water (e.g. a valve calibrated for 2 l/sec used in an application with water and glycol at a concentration of 25% glycol will have an adjusted nominal flow rate of 1.969 l/sec).

For questions concerning other fluids and temperatures, please contact your FlowCon representative or one of the FlowCon offices.

2) Pressure Differential Range Selection

FlowCon K valves are available in four different operational pressure differential ranges, i.e. 10-95 kPaD, 22-210 kPaD, 40-390 kPaD and 90-880 kPaD. This is the pressure differential across the valve itself.

To select which range of operation is applicable for a particular circuit, determine the minimum and maximum pressure drops that the valve will experience during operation. The maximum typically occurs when the other circuits are closed, and the minimum when the other circuits are open. Then select one of the operating ranges which is wider than the range of pressure differential fluctuation calculated.

Verification of the pressure differential across the valve is possible through the optional pressure/-temperature test plugs.

3) Size Selection

The FlowCon K valves are available in the following sizes: DN15, 20, 25, 32, 40, 50, 65 and 80. Standard FlowCon K valves are fixed female ISO threaded.

Valve Location

The hydronic function of the valve is not affected by whether it is installed on the supply or return side of the unit. The orientation of the cartridge access should be considered in order to have the ability to change or clear the cartridge of debris if necessary. Similarly, the pressure/temperature plugs should be accessible. It is important that the flow arrow of the valve be pointing in the right direction.

Principle of Operation

The FlowCon K valve utilizes a specific flow rate cartridge. Below its pressure differential range it acts as a fixed orifice (this allows a modulating valve in the same circuit to operate with valve authority up to the flow rate specified for the FlowCon K).

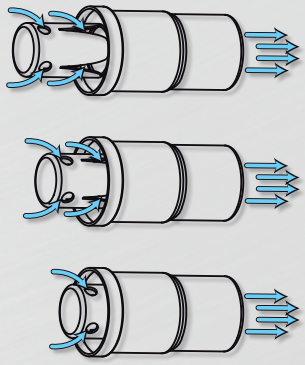

Within the operating pressure differential range, the effective open orifice area of the cartridge is automatically adjusted to the point where the specified flow rate will be delivered (as the pressure differential increases, the open area closes and as it decreases, the area opens).

When the pressure differential range is exceeded, the valve again becomes a fixed orifice device. This ensures that no part of the system is starved or shut down.

Technical Data

For further information please see FlowCon tech note and the catalogue: FlowCon Cartridges.
For latest updates please see ***www.flowcon.com.***

			K DN15	K DN20	K DN25	K DN25	K DN32	K DN40	K DN40	K DN50	K DN50	K DN65	K DN80
Static Pressure		(kPa)	2500			2500			1600		1600		
		(psi)	360			360			230		230		
Temperature Rating (media)		(ºC)	-30 to +120			-30 to +120			-30 to +120		-30 to +120		
		(ºF)	-22 to +248			-22 to +248			-22 to +248		-22 to +248		
Pressure Drop Data			NOTE: For pump head calculations, add the minimum pressure differential for the index circuit to the other components pressure losses (i.e. valves, coil, etc.)										
Valve	(Kv-value)	(m^3/hr)	5	7	10	20	30		35	52	65		
	(Cv-value)	(GPM)	5.8	8.1	11.6	23.2	34.8		40.6	60.3	75.4		

Stainless Steel Cartridge		**F360xxx**	**F361xxx**	**F3C2xxxx**	**F324xxxx**
Size of Cartridge	(mm)	20mm	40mm	50mm	80mm
	(inch)	3/4”	1 1/2”	2”	3”
Pressure Differential	(kPaD)	10-880	10-880	10-880	10-880
	(psid)	1-128	1-128	1-128	1-128
Flow Rate	(l/sec)	0.021-1.01	0.189-2.78	0.757-7.19	0.883-10.10
	(GPM)	0.333-16.0	3.00-44.0	12.0-114	14.0-160

FlowCon Pure 316 Stainless Steel 40-50mm

Automatic Balancing Valve – Pre-Set Built-In Flow-Limiter

SPECIFICATIONS

Pressure rating:	3000 kPa at +20°C / 435 psi at +68°F
Temperature rating, media:	0ºC to +200ºC / +32ºF to +392ºF +200ºC at 660 kPa or lower / +392ºF at 95.7 psi or lower
Material:	
- Body:	AISI 316L stainless steel 0.8µ Ra/ISO N6/150 Grit on outer surfaces 0.4µ Ra/ISO N5/240 Grit on inner surfaces
- Shims:	EN 1.4404, corresponding to AISI 316L stainless steel
- Spring:	EN 1.4401, corresponding to AISI 316 stainless steel
- Cup:	AISI 316L stainless steel
- Orifice:	AISI 316L stainless steel
- Lock ring:	EN 1.4462, corresponding to AISI 318LN stainless steel
Pressure range:	100-800 kPaD / 14.5-116 psid
End connections:	Clamp Ferrules sizes: 1 1/2” and 2”, fittable for Tri-Clover connections Clamps and gaskets are not supplied by FlowCon

DIMENSIONS AND WEIGHTS (NOMINAL) (measured in mm unless noted)

Model no.	End connection[1]	D1 (mm)	D2 (mm)	L (mm)	Weight[2] (kgs.)
F494.8.1.xx	1½" clamp ferrules	38.1	50.6	68.0	0.6
F494.8.2.xx	2" clamp ferrules	50.8	63.5	110.0	1.3

Note 1: Fittable for Tri-Clover connections.
Note 2: Nominal weight, including cartridges and packing material, exact weight is dependent on cartridges.

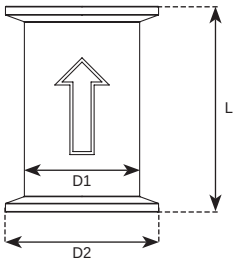

MODEL NUMBER SELECTION

F494 . 8 . ____ . ____

Insert pressure range type:
8 = 100-800kPaD

Insert size:
1 = 1½"
2 = 2"

Insert flow #:
According to flow rate table below

Example: F494.8.1.06=Mini-Wafer for 1 1/2" clamps with flow rate of 0.493 l/sec.

FLOW RATE GRAPH (accuracy: ±10% of controlled flow rate).

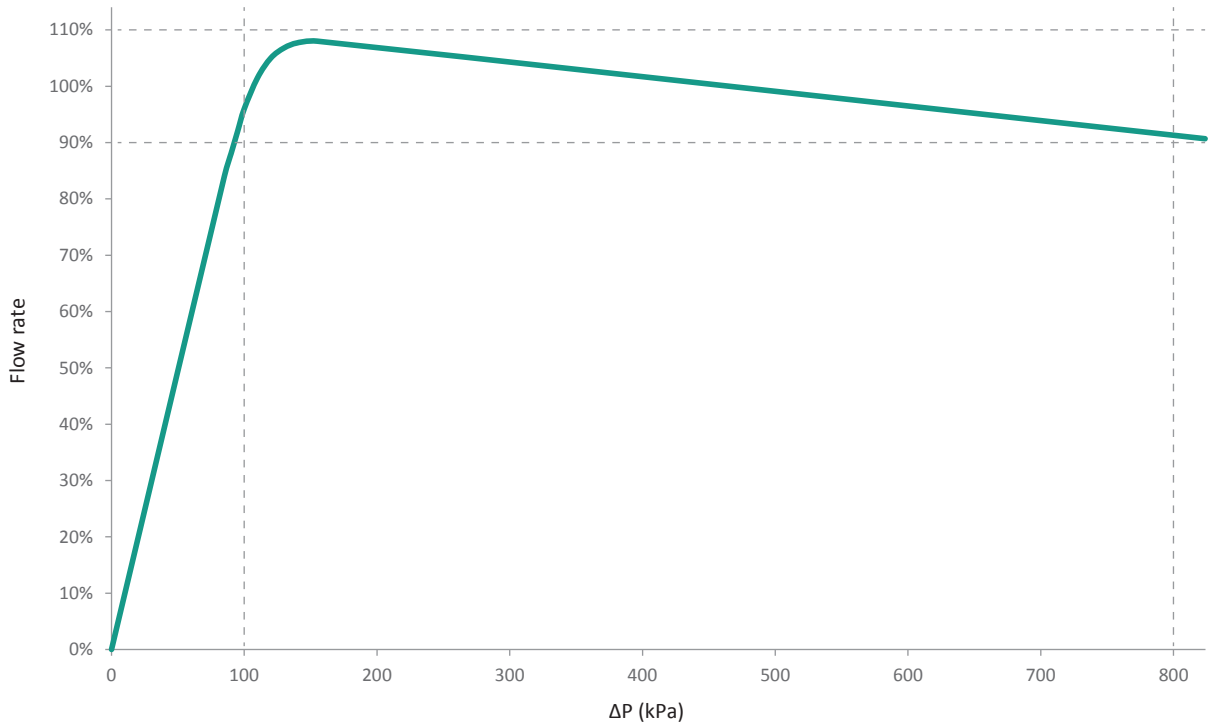

FLOW RATE TABLE - STAINLESS STEEL INTERNAL PART - FOR 1 1/2” VALVES

20mm · 3/4” · Stainless Steel Internal Parts - for 1 1/2” valves			
Flow #	**Flow (GPM)**	**Flow (l/hr)**	**Flow (l/sec)**
11	3.30	750	0.208
01	3.90	887	0.246
02	4.40	1000	0.277
03	5.40	1230	0.340
04	6.40	1450	0.403
05	7.00	1600	0.441
06	7.80	1770	0.493
07	8.75	1990	0.553
08	9.60	2180	0.606
10	11.5	2610	0.726
12	13.2	3000	0.833
14	15.1	3430	0.954
16	16.8	3810	1.06

Accuracy: ±10% of controlled flow rate.

FLOW RATE TABLE - STAINLESS STEEL INTERNAL PART - FOR 2” VALVES

40mm · 1 1/2” · Stainless Steel Internal Parts - for 2” valves			
Flow #	**Flow (GPM)**	**Flow (l/hr)**	**Flow (l/sec)**
09	12.4	2800	0.780
10	13.6	3090	0.859
12	16.1	3660	1.02
14	18.5	4200	1.17
16	20.8	4720	1.31
18	23.0	5240	1.46
20	25.2	5730	1.59
22	27.4	6220	1.73
24	29.4	6690	1.85
26	31.5	7170	1.99
28	33.5	7600	2.12
30	35.5	8060	2.24
32	37.6	8540	2.37
34	39.6	8990	2.50
36	41.7	9460	2.63
38	43.7	9920	2.76
40	45.8	10400	2.89
42	47.8	10900	3.02
44	49.8	11300	3.15

Accuracy: ±10% of controlled flow rate.

GENERAL SPECIFICATIONS

1. AUTOMATIC BALANCING VALVES – FLOWCON MINI-WAFER

1.1. Contractor shall install automatic balancing valves where indicated in drawings.
1.2. Valve shall consist of a dynamic, flow limiting device.

2. VALVE

2.1. Valve shall consist of AISI 316/316L/318LN or equivalent EN Stainless Steel.
2.2. Valve housing shall be rated at no less than 3000 kPa (435 psi) static pressure and +200°C (+392°F), but within the below graph.
2.3. Valve housing shall be permanently marked to show direction of flow.
2.4. Valve housing shall be compatible with Tri-Clover Clamps.

3. FLOW REGULATOR / AUTOMATIC BALANCING UNIT

3.1. Flow regulation shall be available in 1 kPaD operational range and minimum range shall be capable of being activated by minimum 100 kPaD. The flow regulation shall be capable of controlling flow within ±10% of rated flow.
3.2. Indication tags shall be available for all valves; tags shall be indelibly marked with part number and flow rate.

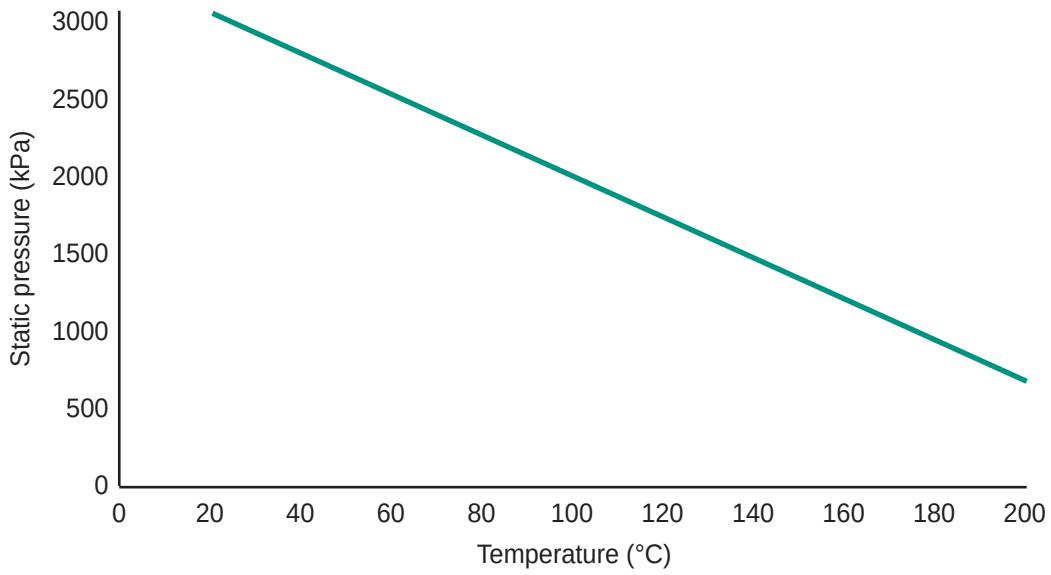

UPDATES

For latest updates please see www.flowcon.com

FlowCon K 15-40mm

Automatic Balance Valve - Accessible Pre-Set Cartridge

SPECIFICATIONS

Pressure rating:	2500 kPa / 360 psi
Temperature rating, media:	-30ºC to +120ºC / -22ºF to +248ºF
Material:	
- Cartridge:	AISI Type 304 stainless steel
	AISI Type 17-7 PH stainless steel spring
- Body:	Forged brass ASTM CuZn40Pb2 or
	DZR brass CW602N CuZn36Pb2AS (“Enkotal®”)
- O-rings:	EPDM
End connections:	Fixed female ISO or NPT
Body tappings:	1/4” ISO
Flow rate range:	0.021-2.774 l/sec
Accessory options:	
Strainer:	20 mesh stainless steel

DIMENSIONS AND WEIGHTS (NOMINAL) (measured in mm unless noted)

Model no.	Valve size	Cartridge size	L	H1	H2	Weight (kgs.)	Kv (m^3/hr)
F380.x.E.x.x	15	20	89.0	61.0	74.0	0.5	5
F380.x.F.x.x	20		96.5	63.5	76.2	0.5	7
F380.x.H.x.x	25		105.0	66.0	86.4	0.5	10
F381.x.H.x.x	25	40	150.0	86.4	94.0	1.5	20
F381.x.J.x.x	32		155.0	89.0	107.0	1.5	30
F381.x.K.x.x	40		155.0	89.0	107.0	1.5	30

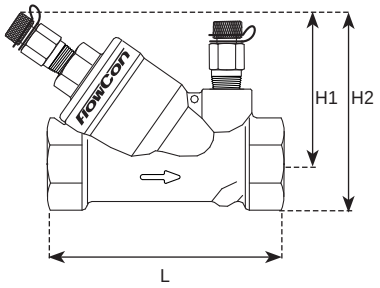

MODEL NUMBER SELECTION[1]

F ____ . ____ . ____ . ____ . ____ . ____ . ____ . ____

Insert body size:
380=15/20/25mm for 20mm cartridge
381=25/32/40mm for 40mm cartridge

Insert kPaD control range:
0=none 1=10-95 kPaD 2=22-210 kPaD 4=40-390 kPaD 8=90-880 kPaD

Insert type of end connection:
E=15mm F=20mm H=25mm J=32mm K=40mm

Insert p/t plugs requirements:
B=pressure/temperature plugs P=taps plugged O=taps open

Insert type of thread:
Leave it blank if end connection type is NPT
I=ISO

Insert valve body material:
Leave it blank for standard body material
D=DZR brass

Insert valve cartridge as per selection chart:
Leave it blank if no cartridge required

Example: F381.4.K.B.I.F361444=FlowCon K 40mm ISO female threaded body, standard brass, with p/t plugs and a F361444 cartridge (1.85 l/sec, 40-390 kPaD).

Note 1: Part number and flow rate of cartridge are indicated on label affixed to body.

FLOW RATE TABLES - STAINLESS STEEL CARTRIDGE - FOR VALVES DN15-DN25 SMALL

20mm · 3/4" · stainless steel cartridge											
Nominal flow rate	Pressure range, ΔP:			10-95 kPaD 1-14 psid		22-210 kPaD 2-32 psid		40-390 kPaD 4-57 psid		90-880 kPaD 8-128 psid	
				Type 1		Type 2		Type 4		Type 8	
	l/sec	l/hr	GPM	Marking	FlowCon	Marking	FlowCon	Marking	FlowCon	Marking	FlowCon
	0.0210	75.7	0.333	11-1	F360111						
	0.0315	114	0.500	01-1	F360101						
	0.0347	125	0.550			11-2	F360211				
	0.0421	151	0.667	02-1	F360102						
	0.0473	170	0.750			01-2	F360201	11-4	F360411		
	0.0631	227	1.00	03-1	F360103	02-2	F360202	01-4	F360401		
	0.0694	250	1.10							11-8	F360811
	0.0841	303	1.33	04-1	F360104			02-4	F360402		
	0.0946	341	1.50			03-2	F360203			01-8	F360801
	0.105	379	1.67	05-1	F360105						
	0.126	454	2.00	06-1	F360106	04-2	F360204	03-4	F360403	02-8	F360802
	0.147	530	2.33	07-1	F360107						
	0.158	568	2.50			05-2	F360205				
	0.168	606	2.67	08-1	F360108			04-4	F360404		
	0.189	681	3.00			06-2	F360206			03-8	F360803
	0.210	757	3.33	10-1	F360110			05-4	F360405		
	0.221	795	3.50			07-2	F360207				
	0.252	908	4.00	12-1	F360112	08-2	F360208	06-4	F360406	04-8	F360804
	0.294	1060	4.67	14-1	F360114			07-4	F360407		
	0.315	1140	5.00	16-1	F360116	10-2	F360210			05-8	F360805
	0.336	1210	5.33					08-4	F360408		
	0.379	1360	6.00			12-2	F360212			06-8	F360806
	0.421	1511	6.67					10-4	F360410		
	0.442	1590	7.00			14-2	F360214			07-8	F360807
	0.505	1820	8.00			16-2	F360216	12-4	F360412	08-8	F360808
	0.589	2120	9.33					14-4	F360414		
	0.631	2270	10.0					16-4	F360416	10-8	F360810
	0.757	2730	12.0							12-8	F360812
	0.883	3180	14.0							14-8	F360814
	1.01	3630	16.0							16-8	F360816

Accuracy: ±5% of controlled flow rate.

FLOW RATE TABLES - STAINLESS STEEL CARTRIDGE - FOR VALVES DN25 LARGE-DN40

40mm · 1 1/2" · stainless steel cartridge											
Nominal flow rate	Pressure range, ΔP:			10-95 kPaD 1-14 psid		22-210 kPaD 2-32 psid		40-390 kPaD 4-57 psid		90-880 kPaD 8-128 psid	
				Type 1		Type 2		Type 4		Type 8	
	l/sec	l/hr	GPM	Marking	FlowCon	Marking	FlowCon	Marking	FlowCon	Marking	FlowCon
	0.189	681	3.00	09-1	F361109						
	0.210	757	3.33	10-1	F361110						
	0.252	908	4.00	12-1	F361112						
	0.284	1020	4.50			09-2	F361209				
	0.294	1060	4.67	14-1	F361114						
	0.315	1140	5.00			10-2	F361210				
	0.336	1210	5.33	16-1	F361116						
	0.379	1360	6.00	18-1	F361118	12-2	F361212	09-4	F361409		
	0.421	1510	6.67	20-1	F361120			10-4	F361410		
	0.442	1590	7.00			14-2	F361214				
	0.463	1670	7.33	22-1	F361122						
	0.505	1820	8.00	24-1	F361124	16-2	F361216	12-4	F361412		
	0.547	1970	8.67	26-1	F361126						
	0.568	2040	9.00			18-2	F361218			09-8	F361809
	0.589	2120	9.33	28-1	F361128			14-4	F361414		
	0.631	2270	10.00	30-1	F361130	20-2	F361220			10-8	F361810
	0.673	2420	10.7	32-1	F361132			16-4	F361416		
	0.694	2500	11.0			22-2	F361222				
	0.715	2570	11.3	34-1	F361134						
	0.757	2730	12.0	36-1	F361136	24-2	F361224	18-4	F361418	12-8	F361812
	0.799	2880	12.7	38-1	F361138						
	0.820	2950	13.0			26-2	F361226				
	0.841	3030	13.3	40-1	F361140			20-4	F361420		
	0.883	3180	14.0	42-1	F361142	28-2	F361228			14-8	F361814
	0.925	3330	14.7	44-1	F361144			22-4	F361422		
	0.946	3410	15.0			30-2	F361230				
	1.01	3630	16.0			32-2	F361232	24-4	F361424	16-8	F361816
	1.07	3860	17.0			34-2	F361234				
	1.09	3940	17.3					26-4	F361426		
	1.14	4090	18.0			36-2	F361236			18-8	F361818
	1.18	4240	18.7					28-4	F361428		
	1.20	4320	19.0			38-2	F361238				
	1.26	4540	20.0			40-2	F361240	30-4	F361430	20-8	F361820
	1.32	4770	21.0			42-2	F361242				
	1.35	4850	21.3					32-4	F361432		
	1.39	5000	22.0			44-2	F361244			22-8	F361822
	1.43	5150	22.7					34-4	F361434		
	1.51	5450	24.0					36-4	F361436	24-8	F361824
	1.60	5750	25.3					38-4	F361438		
	1.64	5910	26.0							26-8	F361826
	1.68	6060	26.7					40-4	F361440		
	1.77	6360	28.0					42-4	F361442	28-8	F361828
	1.85	6660	29.3					44-4	F361444		
	1.89	6810	30.0							30-8	F361830
	2.02	7270	32.0							32-8	F361832
	2.15	7720	34.0							34-8	F361834
	2.27	8180	36.0							36-8	F361836
	2.40	8630	38.0							38-8	F361838
	2.52	9080	40.0							40-8	F361840
	2.65	9540	42.0							42-8	F361842
	2.78	9990	44.0							44-8	F361844

Accuracy: ±5% of controlled flow rate.

ACCESSORIES

- P/t plugs: 2 x ACC00101
- 20 mesh strainer (ACC609000 / ACC609001)

GENERAL SPECIFICATIONS

1. AUTOMATIC BALANCING VALVES - FLOWCON K

1.1. Contractor shall install automatic balancing valves where indicated in drawings.
1.2. Valve shall consist of a dynamic and accessible flow limiting device.

2. VALVE HOUSING

2.1. Valve housing shall consist of forged brass ASTM CuZn40Pb2 or DZR brass CW602N CuZn36Pb2AS (Enkotal®), rated at no less than 2500 kPa static pressure and +120ºC.
2.2. Valve housing shall be permanently marked to show direction of flow.
2.3. Valve housing shall be ISO female threaded for the appropriate pipe size and shall be configured for flow regulation unit accessibility.
2.4. Optional dual pressure/temperature test plugs for verifying accuracy of flow performance shall be available for all valve sizes.

3. FLOW REGULATOR / AUTOMATIC BALANCING UNIT

3.1. Flow regulation unit assembly shall be manufactured of AISI type 304 stainless steel and stainless steel 17-7 spring.
3.2. Flow regulation unit shall be readily accessible for change-out or maintenance.
3.3. Flow regulation unit shall be available in 4 different kPaD operational ranges, minium range shall be capable of being activated by minimum 10 kPaD. Further, the flow regulation unit shall be capable of controlling flow within ±5% of rated flow.
3.4 Indentification tags shall be available for all valves; tags shall be indelibly marked with part number and flow rate.

2-WAY APPLICATION AND SCHEMATIC EXAMPLE

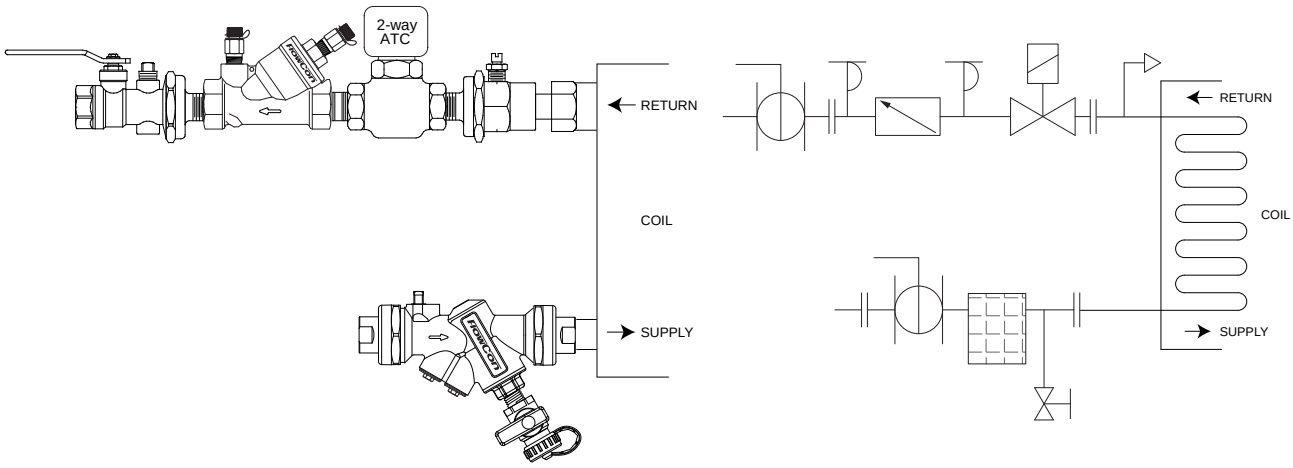

3-WAY APPLICATION AND SCHEMATIC EXAMPLE

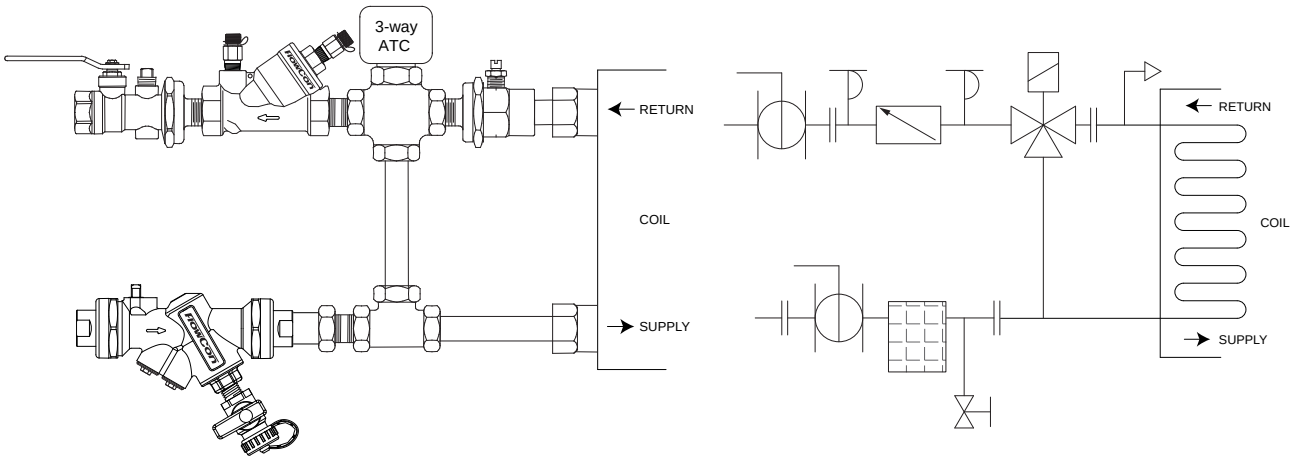

UPDATES

For latest updates please see www.flowcon.com

FlowCon K 40-80mm

Automatic Balance Valve - Accessible Pre-Set Cartridge

SPECIFICATIONS

Pressure rating:	1600 kPa / 230 psi
Temperature rating, media:	-30ºC to +120ºC / -22ºF to +248ºF
Material:	
- Cartridge:	AISI Type 304 stainless steel AISI Type 17-7 PH stainless steel spring
- Body:	Forged brass ASTM CuZn40Pb2 or DZR brass CW602N CuZn36Pb2AS (“Enkotal®”) (DN40-DN50 small) or cast brass (DN50 large-DN80)
- O-rings:	EPDM
End connections:	F382-models: Fixed female ISO F383-models: Fixed female ISO or NPT
Body tappings:	1/4” ISO (DN40-DN50 small) 1/4” NPT (DN50 large-DN80)
Flow rate range:	0.757-10.09 l/sec

DIMENSIONS AND WEIGHTS (NOMINAL) (measured in mm unless noted)

Model no.	Valve size	Cartridge size	A	B	C	Weight (kgs.)	Kv (m^3/hr)
F382.x.K.x.x[1]	40	50	166	85	114	1.8	35
F382.x.L.x.x[1]	50		174	88	123	2.1	52
F383.x.L.x.x	50	80	226	69	216	4.3	65
F383.x.M.x.x	65		249				
F383.x.N.x.x	80		259				

Note 1: only ISO available

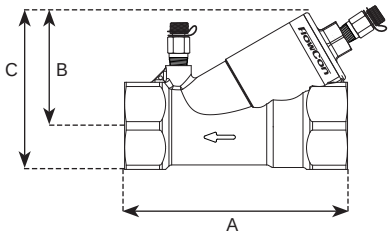

FlowCon K Model F382

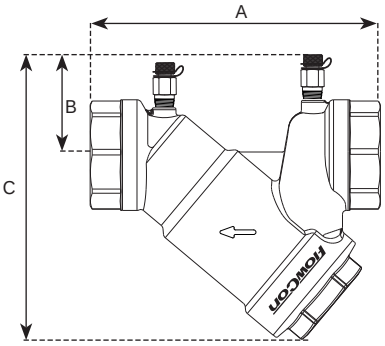

FlowCon K Model F383

MODEL NUMBER SELECTION[2]

F____.____.____.____.____.____.____.____

Insert body size:
382=40/50mm for 50mm cartridge (only ISO)
383=50/65/80mm for 80mm cartridge

Insert kPaD control range:
0=none 1=10-95 kPaD 2=22-210 kPaD 4=40-390 kPaD 8=90-880 kPaD

Insert type of end connection:
K=40mm L=50mm M=65mm N=80mm

Insert p/t plugs requirements:
B=pressure/temperature plugs P=taps plugged O=taps open

Insert type of thread:
N=NPT (not available for F382-models)
I=ISO

Insert valve body material:
Leave it blank for standard body material
D=DZR brass (DN40-DN50mm small)

Insert valve cartridge as per selection chart:
Leave it blank if no cartridge required

Example: F382.2.K.B.I.F3C2248=FlowCon K 40mm ISO female threaded body, standard brass with p/t plugs and a F3C2248 cartrige (1.51 l/sec, 22-210 kPaD).

Note 2: Part number and flow rate of cartridge are indicated on label affixed to body.

FLOW RATE TABLES - STAINLESS STEEL CARTRIDGE - FOR VALVES DN40 AND DN50 SMALL

50mm · 2” · stainless steel cartridge											
Nominal flow rate	Pressure range, ΔP:			10-95 kPaD 1-14 psid		22-210 kPaD 2-32 psid		40-390 kPaD 4-57 psid		90-880 kPaD 8-128 psid	
				Type 1		**Type 2**		**Type 4**		**Type 8**	
	l/sec	l/hr	GPM	Marking	FlowCon	Marking	FlowCon	Marking	FlowCon	Marking	FlowCon
	0.757	2730	12.0	36-1	F3C2136						
	0.883	3180	14.0	42-1	F3C2142						
	1.01	3630	16.0	48-1	F3C2148						
	1.14	4090	18.0	54-1	F3C2154	36-2	F3C2236				
	1.26	4540	20.0	60-1	F3C2160						
	1.32	4770	21.0			42-2	F3C2242				
	1.39	5000	22.0	66-1	F3C2166						
	1.51	5450	24.0	72-1	F3C2172	48-2	F3C2248	36-4	F3C2436		
	1.64	5910	26.0	78-1	F3C2178						
	1.70	6130	27.0			54-2	F3C2254				
	1.77	6360	28.0	84-1	F3C2184			42-4	F3C2442		
	1.89	6810	30.0	90-1	F3C2190	60-2	F3C2260				
	2.02	7270	32.0	96-1	F3C2196			48-4	F3C2448		
	2.08	7490	33.0			66-2	F3C2266				
	2.15	7720	34.0	102-1	F3C21102						
	2.27	8180	36.0	108-1	F3C21108	72-2	F3C2272	54-4	F3C2454	36-8	F3C2836
	2.40	8630	38.0	114-1	F3C21114						
	2.46	8860	39.0			78-2	F3C2278				
	2.52	9080	40.0					60-4	F3C2460		
	2.65	9540	42.0			84-2	F3C2284			42-8	F3C2842
	2.78	9990	44.0					66-4	F3C2466		
	2.84	10200	45.0			90-2	F3C2290				
	3.03	10900	48.0			96-2	F3C2296	72-4	F3C2472	48-8	F3C2848
	3.22	11600	51.0			102-2	F3C22102				
	3.28	11800	52.0					78-4	F3C2478		
	3.41	12300	54.0			108-2	F3C22108			54-8	F3C2854
	3.53	12700	56.0					84-4	F3C2484		
	3.60	12900	57.0			114-2	F3C22114				
	3.79	13600	60.0					90-4	F3C2490	60-8	F3C2860
	4.04	14500	64.0					96-4	F3C2496		
	4.16	15000	66.0							66-8	F3C2866
	4.29	15400	68.0					102-4	F3C24102		
	4.54	16400	72.0					108-4	F3C24108	72-8	F3C2872
	4.79	17300	76.0					114-4	F3C24114		
	4.92	17700	78.0							78-8	F3C2878
	5.30	19100	84.0							84-8	F3C2884
	5.68	20400	90.0							90-8	F3C2890
	6.06	21800	96.0							96-8	F3C2896
	6.44	23200	102							102-8	F3C28102
	6.81	24500	108							108-8	F3C28108
	7.19	25900	114							114-8	F3C28114

Accuracy: ±5% of controlled flow rate.

FLOW RATE TABLES - STAINLESS STEEL CARTRIDGE - FOR VALVES DN50 LARGE-DN80

80mm · 3” · stainless steel cartridge

Nominal flow rate			Pressure range, ΔP:	10-135 kPaD 1-20 psid		22-210 kPaD 2-32 psid		40-390 kPaD 4-57 psid		90-880 kPaD 8-128 psid	
				Type 1		**Type 2**		**Type 4**		**Type 8**	
	l/sec	l/hr	GPM	Marking	FlowCon	Marking	FlowCon	Marking	FlowCon	Marking	FlowCon
	0.883	3180	14.0	35-1	F324135						
	1.01	3630	16.0	40-1	F324140						
	1.10	3970	17.5			35-2	F324235				
	1.14	4090	18.0	45-1	F324145						
	1.26	4540	20.0	50-1	F324150	40-2	F324240				
	1.39	5000	22.0	55-1	F324155						
	1.42	5110	22.5			45-2	F324245				
	1.47	5300	23.3					35-4	F324435		
	1.51	5450	24.0	60-1	F324160						
	1.58	5680	25.0			50-2	F324250				
	1.64	5910	26.0	65-1	F324165						
	1.68	6060	26.7					40-4	F324440		
	1.73	6250	27.5			55-2	F324255				
	1.77	6360	28.0	70-1	F324170						
	1.89	6810	30.0	75-1	F324175	60-2	F324260	45-4	F324445		
	2.02	7270	32.0	80-1	F324180						
	2.05	7380	32.5			65-2	F324265				
	2.10	7570	33.3					50-4	F324450		
	2.15	7720	34.0	85-1	F324185						
	2.21	7950	35.0			70-2	F324270			35-8	F324835
	2.27	8180	36.0	90-1	F324190						
	2.31	8330	36.7					55-4	F324455		
	2.37	8520	37.5			75-2	F324275				
	2.40	8630	38.0	95-1	F324195						
	2.52	9080	40.0	100-1	F3241100	80-2	F324280	60-4	F324460	40-8	F324840
	2.65	9540	42.0	105-1	F3241105						
	2.68	9650	42.5			85-2	F324285				
	2.73	9840	43.3					65-4	F324465		
	2.78	9990	44.0	110-1	F3241110						
	2.84	10200	45.0			90-2	F324290			45-8	F324845
	2.90	10400	46.0	115-1	F3241115						
	2.94	10600	46.7					70-4	F324470		
	3.00	10800	47.5			95-2	F324295				
	3.03	10900	48.0	120-1	F3241120						
	3.15	11400	50.0	125-1	F3241125	100-2	F3242100	75-4	F324475	50-8	F324850
	3.28	11800	52.0	130-1	F3241130						
	3.31	11900	52.5			105-2	F3242105				
	3.36	12100	53.3					80-4	F324480		
	3.41	12300	54.0	135-1	F3241135						
	3.47	12500	55.0			110-2	F3242110			55-8	F324855
	3.53	12700	56.0	140-1	F3241140						
	3.58	12900	56.7					85-4	F324485		
	3.63	13100	57.5			115-2	F3242115				
	3.66	13200	58.0	145-1	F3241145						
	3.79	13600	60.0	150-1	F3241150	120-2	F3242120	90-4	F324490	60-8	F324860
	3.94	14200	62.5			125-2	F3242125				
	4.00	14400	63.3					95-4	F324495		
	4.10	14800	65.0			130-2	F3242130			65-8	F324865
	4.21	15100	66.7					100-4	F3244100		
	4.26	15300	67.5			135-2	F3242135				
	4.42	15900	70.0			140-2	F3242140	105-4	F3244105	70-8	F324870
	4.57	16500	72.5			145-2	F3242145				
	4.63	16700	73.3					110-4	F3244110		
	4.73	17000	75.0			150-2	F3242150			75-8	F324875
	4.84	17400	76.7					115-4	F3244115		
	5.05	18200	80.0					120-4	F3244120	80-8	F324880
	5.26	18900	83.3					125-4	F3244125		
	5.36	19300	85.0							85-8	F324885
	5.47	19700	86.7					130-4	F3244130		
	5.68	20400	90.0	220-1	F3241220*			135-4	F3244135	90-8	F324890
	5.89	21200	93.3					140-4	F3244140		
	5.99	21600	95.0							95-8	F324895
	6.10	22000	96.7					145-4	F3244145		
	6.31	22700	100					150-4	F3244150	100-8	F3248100
	6.62	23800	105							105-8	F3248105
	6.94	25000	110	270-1	F3241270*	220-2	F3242220**			110-8	F3248110
	7.26	26100	115							115-8	F3248115
	7.57	27300	120							120-8	F3248120
	7.89	28400	125							125-8	F3248125
	8.20	29500	130	320-1	F3241320*					130-8	F3248130
	8.52	30711	135			270-2	F3242270**			135-8	F3248135
	8.83	31800	140							140-8	F3248140
	9.15	32900	145							145-8	F3248145
	9.46	34100	150							150-8	F3248150
	10.10	36300	160			320-2	F3242320**				

Accuracy: ±5% of controlled flow rate.

* Standard flow, high capacity: the pressure range for these flow rates is 28-135 kPaD
** Standard flow, high capacity: the pressure range for these flow rates is 55-210 kPad.

GENERAL SPECIFICATIONS

1. AUTOMATIC BALANCING VALVES - FLOWCON K

1.1. Contractor shall install automatic balancing valves where indicated in drawings.
1.2. Valve shall consist of a dynamic and accessible flow limiting device.

2. VALVE HOUSING

2.1. Valve housing shall consist of forged brass ASTM (CuZn40Pb2) or DZR brass CW602N CuZn6Pb2AS ("Enkotal®") (FlowCon K DN40-DN50 small) or cast brass (FlowCon K DN50 large-DN80) and be rated at no less than 1600 kPa static pressure and +120ºC.
2.2. Valve housing shall be permanently marked to show direcetion of flow.
2.3. Valve housing shall be ISO female threaded for the appropriate pipe size and shall be configured for accessibility.
2.4. Optional dual pressure/temperature test plugs for verifying accuracy of flow performance shall be available for all valve sizes.
2.5. Housing shall be configured for flow regulation unit accessibility.

3. FLOW REGULATOR / AUTOMATIC BALANCING UNIT

3.1. Flow regulation unit assembly shall be manufactured of AISI type 304 stainless steel, and stainless steel 17-7 spring.
3.2. Flow regulation unit shall be readily accessible for change-out or maintenance.
3.3. Flow regulation unit shall be available in 4 different kPaD operational ranges, minium range shall be capable of being activated by minimum 10 kPaD. Further, the flow regulation unit shall be capable of controlling flow within ±5% of rated flow.
3.4 Indentification tags shall be available for all valves; tags shall be indelibly marked with part number and flow rate.

2-WAY APPLICATION AND SCHEMATIC EXAMPLE

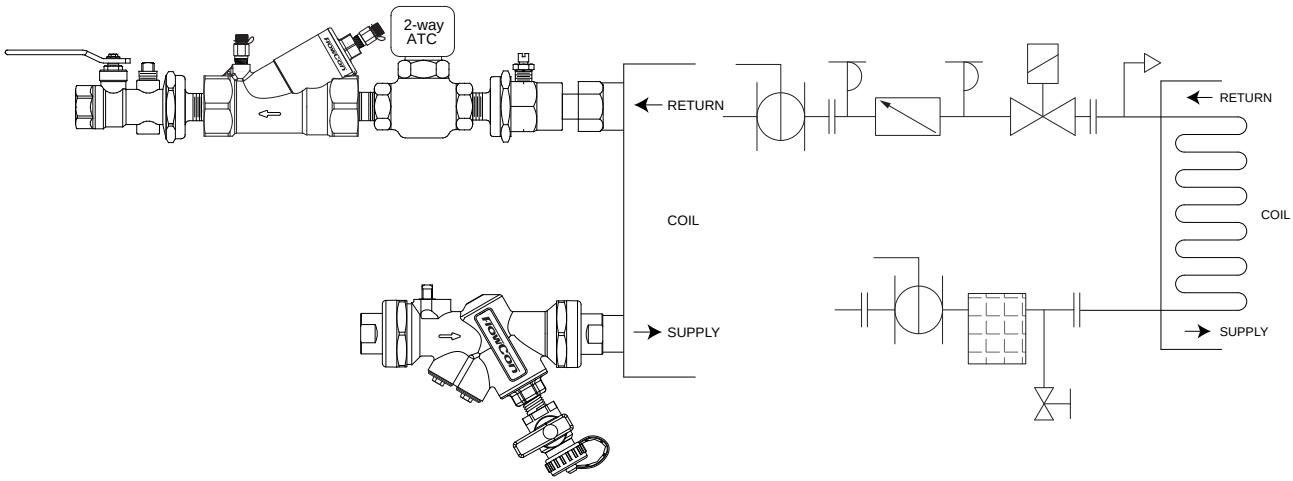

3-WAY APPLICATION AND SCHEMATIC EXAMPLE

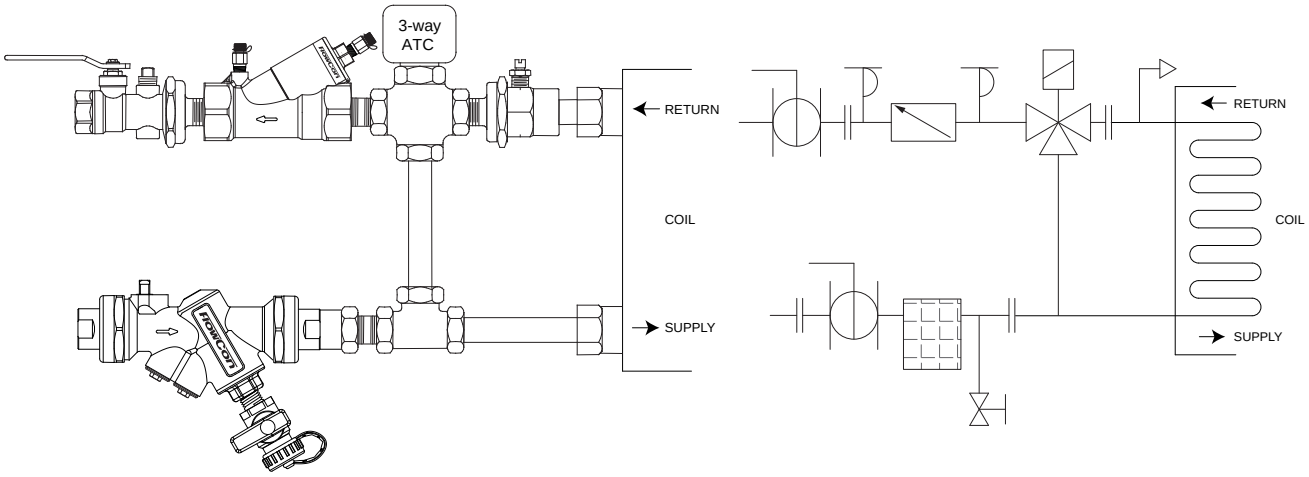

UPDATES

For latest updates please see www.flowcon.com

FlowCon High Flow

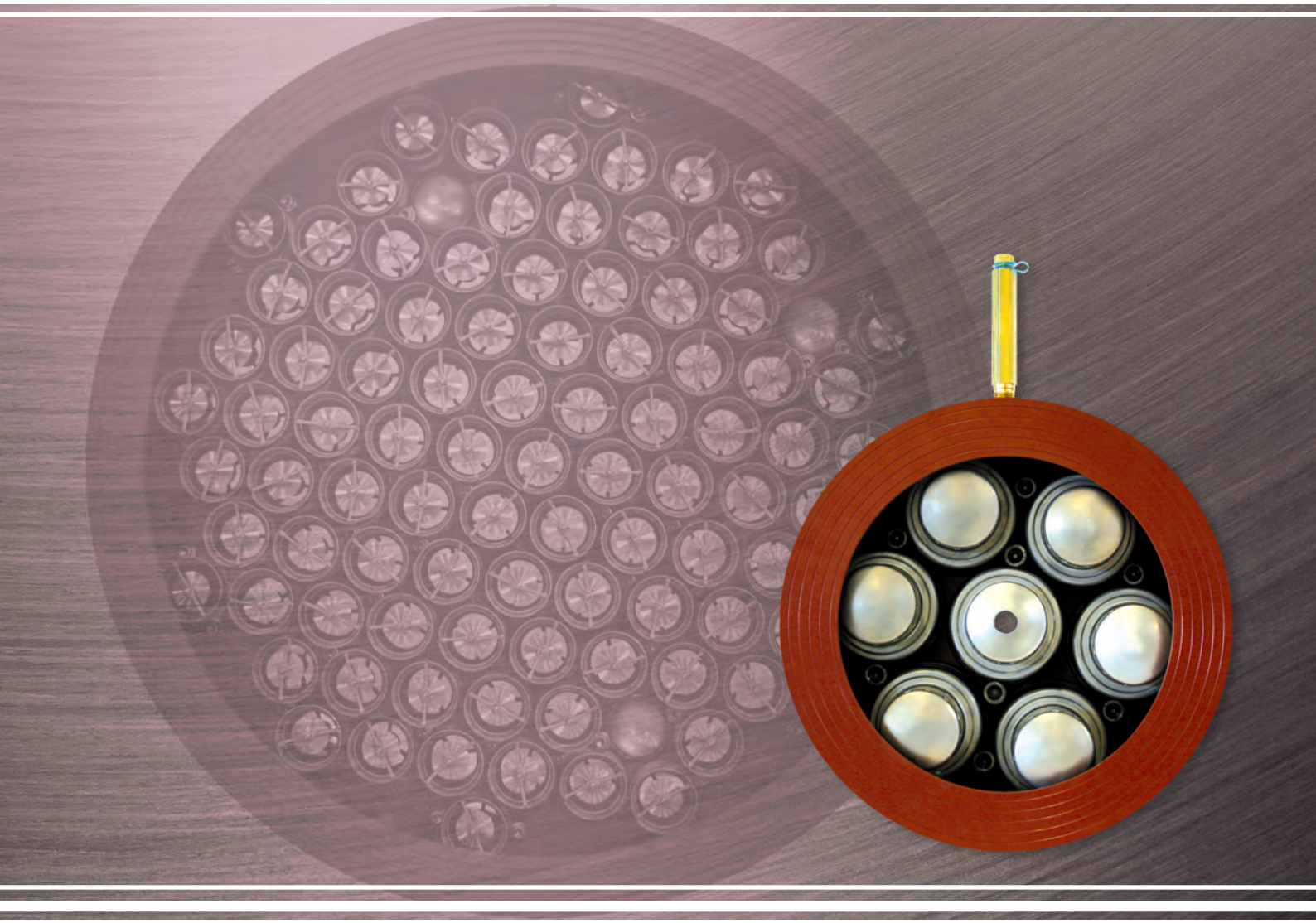

The High Flow Valve Series

FlowCon High Flow

Automatic, Dynamic Balancing Valves

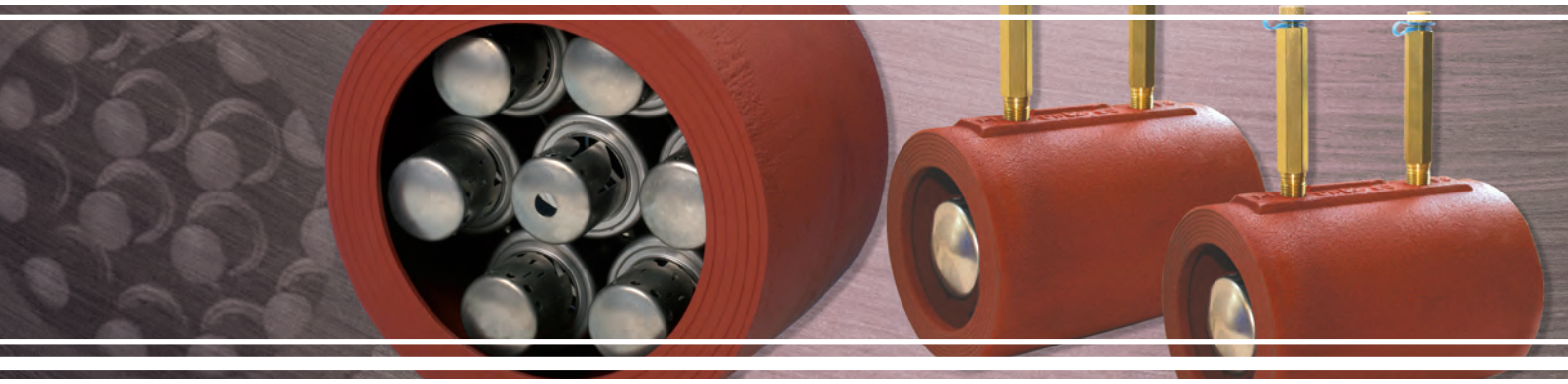

The FlowCon high flow series of valves are designed to meet the higher capacity flow limiting requirements of pumps, chillers, boilers, condensers, heat exchangers, cooling towers and filters.

Product Range

The high flow series cover Uni-Flange, AHU-Wafer, Wafer and Grooved End. Applications are many and each product covers several different ones from air handling units and boiler flow control in common HVAC systems over multiple chillers / multiple heat exchangers or pump balancing system in high-rise buildings to fueling, industrial process and filtration applications.

Features and Benefits

- **Automatic balancing,** the correct flow rate for each circuit is achieved automatically.
- **Dynamic balancing,** the correct flow rate is maintained as each valve compensates for pressure fluctuations in the system.
- **Pre-set stainless steel cartridge(s)** with few moving parts, ensure high reliability.
- **Accuracy** of ±5%.
- **Wide range of sizes and flow rates,** max. 900mm and 1222.2 l/sec.
- **Pressure / temperature measurements plugs** for verifying operating pressure differential range.

Principle of Operation

The FlowCon high flow valves utilize precision calibrated stainless steel flow rate cartridges to achieve the desired flow rate. Each cartridge is manufactured to deliver a specific flow rate over a wide operating range of differential pressures at a tolerance of ±5%. This is done by automatically adjusting the open orifice area of the cartridge in reaction to change in pressure.

High flow valves requiring more flow than achieved by a single cartridge, utilize multiple cartridges mounted in parallel into webbing within the valve body. The sum of the flow rates of the cartridges within any valve equals the total flow rate for the valve. For instance a 150mm (6") wafer containing four cartridges, i.e. two at 4.00 l/sec and two at 5.05 l/sec, will have a total flow rate of 18.1 l/sec.

As shown in the picture on next page, the cartridge is simply a fixed orifice device below its pressure differential range. This allows a modulating valve in the same circuit to operate with valve authority up to the flow rate specified.

Once in the pressure differential range, the spring mounted cup of the cartridge actually slides within the cartridge housing adjusting the effective open orifice area of the cartridge to the exact point, where the specified flow rate will be delivered. As the pressure differential across the valve increases, the orifice area closes; as it decreases, the orifice area opens. In multi-cartridge valves, all cartridges will operate simultaneously.

When the pressure differential range is exceeded, the valve again becomes a fixed orifice device. This ensures that, even under extreme conditions, no part of the system is starved or shut down.

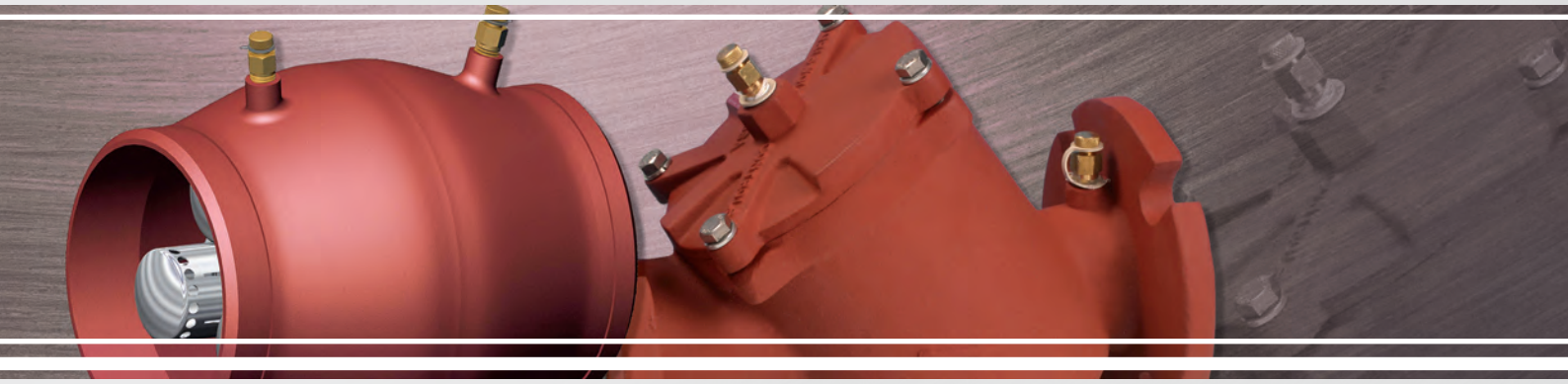

Selection

In selecting a FlowCon high flow valve, the following information is needed: 1) flow rate, 2) pressure differential range and 3) pipe size.

1) Flow Rate Selection

In determining the flow rate, it must be decided whether the circuit will be a constant flow or modulating system.

If the valve is being fit into a constant flow system, simply select the flow rate from the Flow Rate Selection Chart (see FlowCon tech notes or the Inserts/Cartridge Catalogue) closest to the designed rate. If the valve is being installed in a variable flow application (used in series with a modulating control valve), simply select the flow rate closest to the designed maximum flow rate of the circuit. The FlowCon high flow valve will then limit the flow to that specific maximum rate. Below the maximum, the valve will add minimal pressure loss to the system. This allows the modulating valve to have authority up to the maximum flow rate designed for that circuit.

For applications controlling the flow of fluids other than water, the specific gravity, viscosity and operating temperature are needed for proper selection. The flow rate cartridges are calibrated for water at approximately 16°C. For questions concerning other fluids and temperatures, please contact your FlowCon representative or one of the FlowCon offices.

2) Pressure Differential Range Selection

The high flow valves are available in four different operational pressure differential ranges, 10-135 kPaD, 22-210 kPaD, 40-390 kPaD and 90-880 kPaD. This is the pressure differential across the valve itself.

To select which range of operation is applicable for a particular circuit, determine the minimum and maximum pressure drops that the valve will experience during operation. The maximum typically occurs when the other circuits are closed, and the minimum when the other circuits are open. Then select one of the operating ranges which is wider than the range of pressure differential fluctuation calculated. In most heating and air conditioning systems either 22-210 kPaD or 40-390 kPaD are sufficient.

Verification of the temperarture, pressure and pressure differential across the valve is possible through the pressure / temperature test plugs.

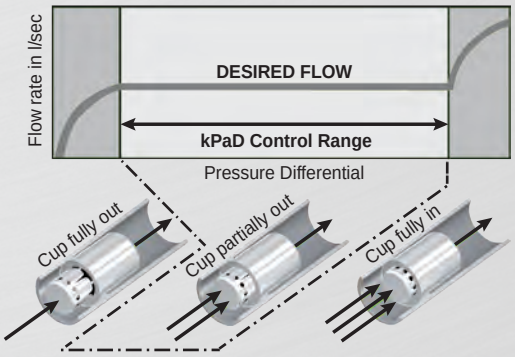

Stainless steel cartridge operation below, within and above the control range.

Below the control range, the cartridge acts as a variable flow device allowing flow to vary below the rated amount.

Within the wide control range, the cartridge modulates in response to change in pressure to maintain a fixed flow rate within ±5% accuracy.

Above the control range, the cartridge acts as a variable flow device, allowing flow to vary above the rated amount.

3) Size Selection

The FlowCon high flow valves are available in sizes from DN50 to DN900 depending on type. All high flow types are for use with either flanges or grooved end clamps. The size of the valve in some applications may be dependent on the flow rate required. If a FlowCon valve larger than the system pipe size is selected, a reducing flange are required.

Valve Location

The hydronic function of the valve is not affected by whether it is installed on the supply or return side of the unit, and the valves may be installed either horizontally or vertically. It is, however, important that the flow arrow of the valve be pointing in the flow direction. Flow in the ''wrong'' direction will not be controlled. The orientation of valve should allow for access to the test plugs. Extensions are available for use in insulated applications.

Applications

Energy efficient heating and cooling systems require accurate flow control to ensure proper operation of primary plant equipment. The FlowCon high flow valves have been specifically designed to control flow and solve balancing problems in such large hydronic systems. Under typical conditions in such a system, pressures may vary by 350 kPa to 700 kPa as pumps are switched on or circuits are isolated. A dynamic reacting valve is required to safeguard equipment and ensure that flow through every active circuit remains constant and predictable.

Condenser Systems

Proper flow rate to a cooling tower is essential for adequate removal of heat from the condenser section of a chiller. Use of dynamic valves maintains even distribution to each condenser and prevents cooling tower flooding.

Primary / Secondary Systems

Primary chillers and pumps are usually designed in parallel to allow equipment staging. This arrangement allows chillers to come on-line only when required during peak cooling hours, thus conserve energy. A FlowCon high flow valve placed at each chiller prevents excess flow caused by over pumping during light load conditions. Installing dynamic balancing valves also protects equipment warranties as flow rates are assured to be in the range specified by the manufacturer. Varying pressures caused by opening and closing of modulating valves are accurately compensated for by the modulating action of the FlowCon high flow valves.

Parallel Pumping

In systems with pumps in parallel, the use of a dynamic balancing valve is essential as the slightest difference in pump characteristics will result in one pump overload and system inefficiency. Dissimilar or different sized pumps accentuate this problem. The FlowCon high flow valves will ensure that the pump is operating at the designed point of its curve by adding the required amount of pressure loss to achieve the designed flow rate.

Technical Data

For further information please see FlowCon tech notes. For latest updates please see ***www.flowcon.com.***

		Wafer DN100-900	Uni-Flange DN65-80	AHU-Wafer DN50-80	Grooved End DN50-500
Static Pressure	(kPa)	3400	1030	2500	2500
	(psi)	493	149	360	360
Temperature Rating (media)	(ºC)	+175	+135	+135	+95
	(ºF)	+347	+275	+275	+203
Pressure Drop Data		NOTE: For pump head calculations, add the minimum pressure differential for the index circuit to the other components pressure losses (i.e. valves, coil, etc.)			
Valve	Kv-value	N/A	105	N/A	N/A
	Cv-value	N/A	121.8	N/A	N/A

Stainless Steel Cartridge		**F324xxxx**	**F3C2xxxx**	**F324xxxx**	**F324xxxx**
Cartridge Size	(mm)	80	50	80	80
	(inch)	3	2	3	3
Pressure Differential	(kPaD)	10-880	10-880	10-880	10-880
	(psid)	1-128	1-128	1-128	1-128
Flow Rate	(l/sec)	0.883-1222.2	0.757-21.6	0.883-10.1	0.883-429
	(GPM)	14.0-19400	12.0-342	14.0-160	14.0-6800

FlowCon AHU-Wafer 50-80mm

Automatic Balancing Valve - Pre-Set Cartridge

SPECIFICATIONS

Pressure rating:	2500 kPa / 360 psi
Temperature rating, media:	-20°C to +135°C / -4°F to +275°F
Material:	
- Cartridge:	AISI type 304 stainless steel
	AISI type 17-7 PH stainless steel spring
- Body tappings:	1/4” NPT
- Body:	Ductile iron ASTM A536, class 60-40-18/EN-GJS-400-18
- O-rings:	EPDM
- Retaining clip:	AISI type 302 stainless steel
End connections:	DIN flanges according to EN1092-1, PN10+
	Size 2”: ANSI B 16.5 300lb class flanges
	Size 2 1/2”-3”: ANSI B 16.5 150lb class flanges
	Flanges are not supplied by FlowCon.
	Studs and nuts are available upon request
Flow rate range:	0.883-10.10 l/sec

DIMENSIONS AND WEIGHTS (NOMINAL) (measured in mm unless noted)

Model no.	Valve size (mm)	Valve size (“)	Cartridge size	Flanges[1]				L	D1	D2	H	Weight (kgs.)
				ANSI ASME B16.5		EN 1092-1						
				Class	D3 (“)	PN	D3 (mm)					
F386.x.L.B	50	2	80	300 and up	6 1/2	10 and up	165	174.5	81.5	107.0	140.0	4.4
F386.x.M.B	65	2 1/2		150 and up	7	10 and up	185			117.5	144.0	6.5
	80	3		150 and up	7 1/2	10 and up	200					

Note 1: Smallest pressue class weld neck flange fitting.

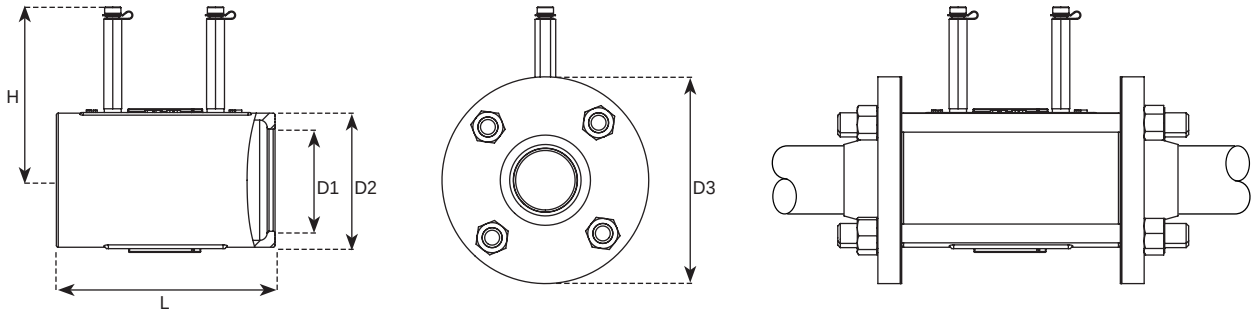

MODEL NUMBER SELECTION

F386 . ____ . ____ . __B__

Insert a kPaD control range:
0=None 1=10-135 kPaD 2=22-210 kPaD 4=40-390 kPaD 8=90-880 kPaD

Insert body size:
L=50mm M=65/80mm

Insert p/t plug requirement:
B=Pressure/temperature plugs (standard)

Example: F386.0.M.B=AHU Wafer for 65/80mm flanges with p/t plugs and no cartridge.

Note: Please specify flow requirements as per selection chart when ordering with cartridge.

FLOW RATE TABLE

80mm · 3” · stainless steel cartridge										
Nominal flow rate	Pressure range, ΔP:		10-135 kPaD 1-20 psid		22-210 kPaD 2-32 psid		40-390 kPaD 4-57 psid		90-880 kPaD 8-128 psid	
			Type 1		Type 2		Type 4		Type 8	
l/sec	l/hr	GPM	Marking	FlowCon	Marking	FlowCon	Marking	FlowCon	Marking	FlowCon
0.883	3180	14.0	35-1	F324135						
1.01	3630	16.0	40-1	F324140						
1.10	3970	17.5			35-2	F324235				
1.14	4090	18.0	45-1	F324145						
1.26	4540	20.0	50-1	F324150	40-2	F324240				
1.39	5000	22.0	55-1	F324155						
1.42	5110	22.5			45-2	F324245				
1.47	5300	23.3					35-4	F324435		
1.51	5450	24.0	60-1	F324160						
1.58	5680	25.0			50-2	F324250				
1.64	5910	26.0	65-1	F324165						
1.68	6060	26.7					40-4	F324440		
1.73	6250	27.5			55-2	F324255				
1.77	6360	28.0	70-1	F324170						
1.89	6810	30.0	75-1	F324175	60-2	F324260	45-4	F324445		
2.02	7270	32.0	80-1	F324180						
2.05	7380	32.5			65-2	F324265				
2.10	7570	33.3					50-4	F324450		
2.15	7720	34.0	85-1	F324185						
2.21	7950	35.0			70-2	F324270			35-8	F324835
2.27	8180	36.0	90-1	F324190						
2.31	8330	36.7					55-4	F324455		
2.37	8520	37.5			75-2	F324275				
2.40	8630	38.0	95-1	F324195						
2.52	9080	40.0	100-1	F3241100	80-2	F324280	60-4	F324460	40-8	F324840
2.65	9540	42.0	105-1	F3241105						
2.68	9650	42.5			85-2	F324285				
2.73	9840	43.3					65-4	F324465		
2.78	9990	44.0	110-1	F3241110						
2.84	10200	45.0			90-2	F324290			45-8	F324845
2.90	10400	46.0	115-1	F3241115						
2.94	10600	46.7					70-4	F324470		
3.00	10800	47.5			95-2	F324295				
3.03	10900	48.0	120-1	F3241120						
3.15	11400	50.0	125-1	F3241125	100-2	F3242100	75-4	F324475	50-8	F324850
3.28	11800	52.0	130-1	F3241130						
3.31	11900	52.5			105-2	F3242105				
3.36	12100	53.3					80-4	F324480		
3.41	12300	54.0	135-1	F3241135						
3.47	12500	55.0			110-2	F3242110			55-8	F324855
3.53	12700	56.0	140-1	F3241140						
3.58	12900	56.7					85-4	F324485		
3.63	13100	57.5			115-2	F3242115				
3.66	13200	58.0	145-1	F3241145						
3.79	13600	60.0	150-1	F3241150	120-2	F3242120	90-4	F324490	60-8	F324860
3.94	14200	62.5			125-2	F3242125				
4.00	14400	63.3					95-4	F324495		
4.10	14800	65.0			130-2	F3242130			65-8	F324865
4.21	15100	66.7					100-4	F3244100		
4.26	15300	67.5			135-2	F3242135				
4.42	15900	70.0			140-2	F3242140	105-4	F3244105	70-8	F324870
4.57	16500	72.5			145-2	F3242145				
4.63	16700	73.3					110-4	F3244110		
4.73	17000	75.0			150-2	F3242150			75-8	F324875
4.84	17400	76.7					115-4	F3244115		
5.05	18200	80.0					120-4	F3244120	80-8	F324880
5.26	18900	83.3					125-4	F3244125		
5.36	19300	85.0							85-8	F324885
5.47	19700	86.7					130-4	F3244130		
5.68	20400	90.0	220-1	F3241220*			135-4	F3244135	90-8	F324890
5.89	21200	93.3					140-4	F3244140		
5.99	21600	95.0							95-8	F324895
6.10	22000	96.7					145-4	F3244145		
6.31	22700	100					150-4	F3244150	100-8	F3248100
6.62	23800	105							105-8	F3248105
6.94	25000	110	270-1	F3241270*	220-2	F3242220**			110-8	F3248110
7.26	26100	115							115-8	F3248115
7.57	27300	120							120-8	F3248120
7.89	28400	125							125-8	F3248125
8.20	29500	130	320-1	F3241320*					130-8	F3248130
8.52	30700	135			270-2	F3242270**			135-8	F3248135
8.83	31800	140							140-8	F3248140
9.15	32900	145							145-8	F3248145
9.46	34100	150							150-8	F3248150
10.10	36300	160			320-2	F3242320**				

Accuracy: ±5% of controlled flow rate.

* Standard flow, high capacity: the pressure range for these flow rates is 28-135 kPaD (4-20 psid).
** Standard flow, high capacity: the pressure range for these flow rates is 55-210 kPad (8-32 psid).

GENERAL SPECIFICATIONS

1. AUTOMATIC BALANCING VALVES - FLOWCON AHU-WAFER

1.1. Contractor shall install automatic balancing valves where indicated in drawings.
1.2. Valve shall consist of a dynamic, flow limiting device.

2. VALVE HOUSING

2.1. Valve housing shall consist of ductile iron ASTM A536-80, class 60-40-18, rated at no less than 2500 kPa static pressure and +135°C.
2.2. Valve housing shall be permanently marked to show direction of flow.
2.3. Dual pressure/temperature test plugs for verifying accuracy of flow performance shall be provided for all valve sizes.
2.4 Valve housing shall be compatible with ANSI B 16.5 150 lb/300 lb steel flanges (depending on size) and be compatible to DIN PN10+ flanges according to EN1092-1.

3. FLOW REGULATOR / AUTOMATIC BALANCING UNIT

3.1. Flow regulation unit assembly shall be manufactured of AISI type 304 stainless steel and stainless steel 17-7 spring.
3.2. Flow regulation unit shall be available in 4 different kPaD operational range; minimum range shall be capable of being activated by minimum 10 kPaD. Further, the flow regulation unit shall be capable of controlling flow within ±5% of rated flow.
3.3. Identification tags shall be available for all valves; tags shall be indelibly marked with part number and flow rate.

UPDATES

For latest updates please see www.flowcon.com

FlowCon Wafer 100-900mm

Automatic Balancing Valve - Pre-Set Cartridge(s)

SPECIFICATIONS

Pressure rating:	3400 kPa / 493 psi
Temperature rating, media:	-20ºC to +175ºC / -4ºF to +347ºF
Material:	
- Cartridge:	AISI Type 304 stainless steel AISI Type 17-7 PH stainless steel spring
- Body:	Ductile iron ASTM A536, class 60-40-18/EN-GJS-400-18
Body tappings:	1/4” NPT
End connections:	Sizes: 100-250mm and 350-900mm: EN1092-1, PN25+ 300mm: EN1092-1, PN40+ 4”-8”, 12”-18” and 32”-36”: ANSI B 16.5 150lb class flanges+ 10” and 20”-30”: ANSI B 16.5 300lb class flanges+ Flanges are not supplied by FlowCon Studs and nuts are available upon request
Flow rate range:	0.883-1222.2 l/sec

DIMENSIONS AND WEIGHTS (NOMINAL) (measured in mm unless noted)

Model no.	D1 (mm)	D1 (")	D2 (±1%)	Cartridge size	Flanges[1]				L (±1%)	H	Weight[2] (kgs.)	Max no. of cartridges per wafer
					ANSI ASME B16.5		EN 1092-1					
					Class	D3 (")	PN	D3 (mm)				
F332x	100	4	172.00		150 and up	9	25 and up[3]	235	197,00	90	15	2[4]
F334x	150	6	218.95		150 and up	11	10 and up	285	184.15	90	19	4
F337x	200	8	276.35		150 and up	13,5	25 and up	360	184.15	90	26	7
F368x	250	10	341.38		300 and up	17,5	25 and up	425	203.20	90	36	11
F369x	300	12	406.40		150 and up	19	40 and up	515	203.20	90	61	15
F339x	350	14	447.80		150 and up	21	25 and up	555	203.20	90	69	19
F384x	400	16	511.05	80	150 and up	23,5	25 and up	620	241.30	90	102	24
F385x	450[5]	18	546.10		150 and up	25	16 and up	640	241.30	90	114	31
F338x	500[5]	20	606.55		300 and up	30,5	16 and up	715	279.40	90	163	37
F386x	600[5]	24	714.25		300 and up	36	16 and up	840	279.40	90	217	55
F330x	800[5]	30	882.65		300 and up[6]	43	10 and up	1015	431.80	90	401	85
		32			150 and up[6]	41.75						
F370x	900[5]	36	1030.00		150 and up[6]	46	25 and up	1185	431.80	90	705	97

Note 1: Smallest pressure class flange fitting.
Note 2: Nominal weight, including cartridges and packing material, exact weight is dependent on cartridges.
Note 3: Fits PN25 and PN40 flanges with M18 studs or studs from ACC3320BD25.
Note 4: Hi-flow cartridges does not fit in this wafer size.
Note 5: 450mm and larger supplied with eyebolt for lifting.
Note 6: According to ASME B16.47 series A.

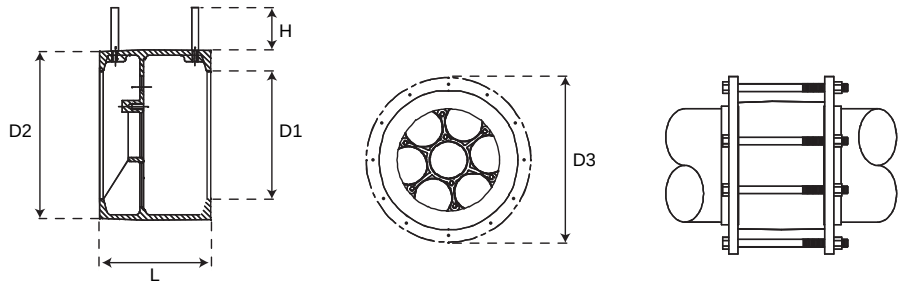

MODEL NUMBER SELECTION[7]

F3 ____ ____ B

Insert body size:
32=100mm, 4" 34=150mm, 6" 37=200mm, 8" 68=250mm, 10"
69=300mm, 12" 39=350mm, 14" 84=400mm, 16" 85=450mm, 18"
38=500mm, 20" 86=600mm, 24" 30=800mm, 30"/32" 70=900mm, 36"

Insert a kPaD control range:
0=None
STANDARD/HI-CAP: 1=10-135 kPaD and 28-135 kPaD 2=22-210 kPaD and 55-210 kPaD 4=40-390 kPaD 8=90-880 kPaD
HI-FLOW[8]: 3=20-125 kPaD 5=35-220 kPaD

Insert p/t plug requirement:
B=Pressure/temperature plugs

Example: F3370B=Wafer for 200mm flanges with p/t plugs and no cartridges.
Note: Please specify flow requirements as per selection chart when ordering with cartridges.

Note 7: Model no. and flow rate are indicated on label affixed to body.
Note 8: Not possible for DN100.

FLOW RATE TABLE PER TYPE OF CARTRIDGE

80mm · 3" · stainless steel cartridge, standard flow							
			Pressure range, ΔP:	10-135 kPaD 1-20 psid	22-210 kPaD 2-32 psid	40-390 kPaD 4-57 psid	90-880 kPaD 8-128 psid
				Type 1	**Type 2**	**Type 4**	**Type 8**
Size (mm)	**Size (")**	**Max no. of cartridges**	**min. available l/sec**	**0.883**	**1.10**	**1.47**	**2.21**
			l/sec increments	**0.127**	**0.160**	**0.210**	**0.31**
100	4	2	max. available l/sec	7.58	9.46	12.62	18.92
150	6	4		15.16	18.92	25.24	37.84
200	8	7		26.53	33.11	44.17	66.22
250	10	11		41.69	52.03	69.41	104.06
300	12	15		56.85	70.95	94.65	141.90
350	14	19		72.01	89.87	119.89	179.74
400	16	24		90.96	113.52	151.44	227.04
450	18	31		117.49	146.63	195.61	293.26
500	20	37		140.23	175.01	233.47	350.02
600	24	55		208.45	260.15	347.05	520.30
800	30	85		322.15	402.05	536.35	804.10
	32						
900	36	97		367.63	458.81	612.07	917.62

Accuracy: ±5% of controlled flow rate.

80mm · 3" · stainless steel cartridge, high capacity					
			Pressure range, ΔP:	28-135 kPaD 4-20 psid	55-210 kPaD 8-32 psid
				Type 1	**Type 2**
Size (mm)	**Size (")**	**Max no. of cartridges**	**min. available l/sec**	**5.68**	**6.94**
			l/sec increments	**1.26**	**1.58**
100	4	2	max. available l/sec	16.4	20.2
150	6	4		32.8	40.4
200	8	7		57.4	70.7
250	10	11		90.2	111.1
300	12	15		123.0	151.5
350	14	19		155.8	191.9
400	16	24		196.8	242.4
450	18	31		254.2	313.1
500	20	37		303.4	373.7
600	24	55		451.0	555.5
800	30	85		697.0	858.5
	32				
900	36	97		795.4	979.7

Accuracy: ±5% of controlled flow rate.

80mm · 3" · stainless steel cartridge, high flow					
			Pressure range, ΔP:	20-125 kPaD 3-18 psid	35-220 kPaD 5-32 psid
				Type 3	**Type 5**
Size (mm)	**Size (")**	**Max no. of cartridges**	**min. available l/sec**	**6.31**	**8.52**
			l/sec increments	N/A	N/A[9]
100	4	N/A	max. available l/sec	N/A	N/A
150	6	4		25.24	50.4
200	8	7		44.17	88.2
250	10	11		69.41	138.6
300	12	15		94.65	189.0
350	14	19		119.89	239.4
400	16	24		151.44	302.4
450	18	31		195.61	390.6
500	20	37		233.47	466.2
600	24	55		347.05	693.0
800	30	85		536.35	1071.0
	32				
900	36	97		612.07	1222.2

Accuracy: ±5% of controlled flow rate.

Note 9: For flow rates in between min. and max. please contact FlowCon.

GENERAL SPECIFICATIONS

1. AUTOMATIC BALANCING VALVES - FLOWCON WAFER

1.1. Contractor shall install automatic balancing valves where indicated in drawings.
1.2. Valve shall consist of a dynamic, flow limiting device.

2. VALVE HOUSING

2.1. Valve housing shall consist of ductile iron ASTM A536-65T, class 60-45-18, rated at no less than 3400 kPa static pressure and +175°C.
2.2. Valve shall be permanently marked to show direction of flow.
2.3. Dual pressure/temperature test plugs for verifying accuracy of flow performance shall be provided for all valve sizes.
2.4. Valve housing shall be compatible with ANSI B 16.5 150lb/300lb steel flanges (depending on size) and be compatible to DIN PN25+/PN40+ flanges (depending on size) according to EN1092-1.
2.5. Sizes 450mm and larger supplied with eyelet bolt for lifting.

3. FLOW REGULATOR / AUTOMATIC BALANCING UNIT

3.1. Flow regulation unit assembly shall be manufactured of AISI type 304 stainless steel and stainless steel 17-7 spring.
3.2. Flow regulation unit shall be available in 4 different kPaD operational range; minimum range shall be capable of being activated by minimum 10 kPaD. Further, the flow regulation unit shall be capable of controlling flow within ±5% of rated flow.
3.3. Identification tags shall be available for all valves; tags shall be indelibly marked with part number and flow rate.

UPDATES

For latest updates please see www.flowcon.com

FlowCon Uni-Flange Valve 65-80mm

Automatic Flow Control - Accessible Pre-Set Cartridge(s)

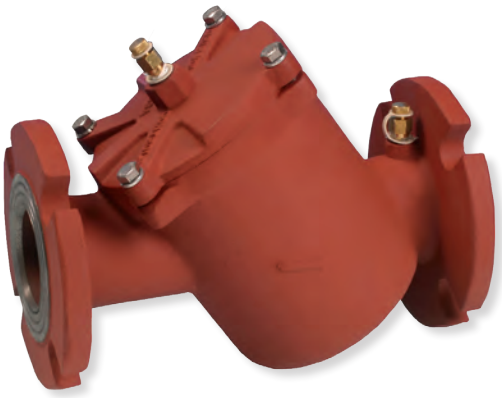

SPECIFICATIONS

Pressure rating:	1030 kPa / 149 psi
Temperature rating:	+135°C / +275°F
Material:	
- Cartridge:	AISI Type 304 stainless steel
	AISI type 17-7 PH stainless steel spring
- Body:	Ductile iron ASTM A5236-80 class 50-40-18
- O-rings:	EPDM
End connections:	ANSI 150 lb. flanges 2 1/2” and 3”
Body tappings:	1/4” NPT with p/t plugs
Assembly:	Valve comes fully assembled
Flow rate range:	0.757-21.577 l/sec
Options:	Two 1/4”-1 1/4” p/t extensions
	Drain valve
Isolation options:	Butterfly valve

DIMENSIONS AND WEIGHTS (NOMINAL) (measured in mm unless noted)

Model no.	Valve size	Cartridge size	L	H1	H2	Kv[1] (m^3/H)	Weight (kgs.)
F3UFxxBx	65/80	50	301.5	133.4	109.2	105	12.7

Note 1: Kv-value measured without cartridge.

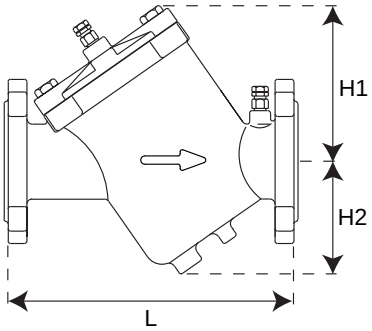

MODEL NUMBER SELECTION[2]

F 3UF

Select a kPaD control range:
0=none 1=10-95 kPaD 2=22-210 kPaD 4=40-390 kPaD 8=90-880 kPaD

Insert isolation option:
B=none (standard)
M=2 1/2" butterfly
N=3" butterfly

Insert number of cartridges:
1=1x2" cartridge ("low" flow)
2=2x2" cartridge ("medium" flow)
3=3x2" cartridge ("high" flow)

Insert tag requirement:
T=Optional aluminum hanging identification tag:

Example: F3UF0B2=Uni-Flange valve for 65/80mm flanges with p/t plugs and no cartridge or isolation.
Note: Please specify flow requirements as per selection chart when ordering with cartridges.

Note 2: Model no. and flow rate are indicated on label affixed to body.

FLOW RATE TABLE

50mm · 2" · stainless steel cartridge							
			Pressure range, ΔP:	10-135 kPaD 1-20 psid	22-210 kPaD 2-32 psid	40-390 kPaD 4-57 psid	90-880 kPaD 8-128 psid
				Type 1	**Type 2**	**Type 4**	**Type 8**
Valve size (mm)	**Valve size (")**	**No. of cartridges**	**min. available l/sec**	**0.757**	**1.14**	**1.51**	**2.27**
			l/sec increments	**0.126**	**0.180**	**0.26**	**0.38**
65/80	2 1/2"/3"	1	max. available l/sec	2.40	3.60	4.79	7.19
		2		4.80	7.20	9.58	14.38
		3		7.20	10.80	14.37	21.57

Accuracy: ±5% of controlled flow rate.

GENERAL SPECIFICATIONS

1. AUTOMATIC BALANCING VALVES - UNI-FLANGE VALVE

1.1. Contractor shall install automatic balancing valves where indicated in drawings.
1.2. Valve shall consist of a dynamic and accessible flow limiting device.

2. VALVE HOUSING

2.1. Valve housing shall consist of ductile iron ASTM A536-80, Class 50-40-18, rated at no less than 1030 kPa static pressure and +135°C.
2.2. Valve housing shall be permanently marked to show directon of flow.
2.3. Valve shall be constructed in a one-piece housing.
2.4. Dual pressure/temperature test plugs for verifying accuracy of flow performance shall be provided for all valve sizes.
2.5. Valve housing shall be compatible with ANSI 150 lb. flanges 65mm (2 1/2”) and 80mm (3”).
2.6. Housing shall be configured for flow regulation unit accessibility.
2.7. Butterfly valve shall be available for all valves.

3. FLOW REGULATOR / AUTOMATIC BALANCING UNIT

3.1. Flow regulation unit assembly shall be manufactured of AISI type 304 stainless steel and stainless steel 17-7 spring.
3.2. Flow regulation unit shall be available in 4 different kPaD operational range; minimum range shall be capable of being activated by minimum 10 kPaD. Further, the flow regulation unit shall be capable of controlling flow within ±5% of rated flow.
3.3. Identification tags shall be available for all valves; tags shall be indelibly marked with part number and flow rate.

UPDATES

For latest updates please see www.flowcon.com

FlowCon Grooved End 50-500mm

Automatic Balacing Valve - Pre-Set Cartridge(s)

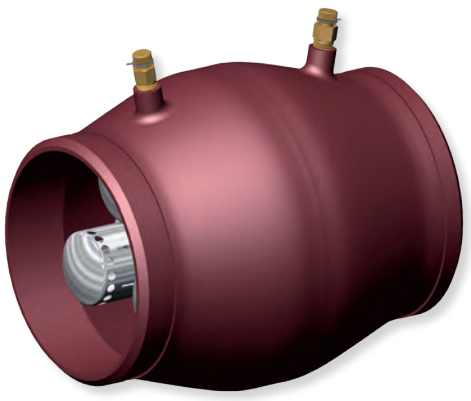

SPECIFICATIONS

Pressure rating:	2500 kPa / 360 psi
Temperature rating:	+95°C / +203°F
Material:	
- Cartridge:	AISI Type 304 stainless steel
	AISI Type 17-7 PH stainless steel spring
- Body:	Steel pipe schedule 40 (with cast iron grooved end clamps on DN50-DN80)
Body tappings:	1/4” NPT
Grooved end:	Please consult FlowCon for grooved end standards compatibility.
Flow rate range:	0.88-429.08 l/sec

DIMENSIONS AND WEIGHTS (NOMINAL) (measured in mm unless noted)

Valve size	Valve size (")	Cartridge size	L	H	Weight (kgs.)	Max no. of cartridges per Grooved End valve
50	2	80	406.4	115.8	6.6	1
65	2 1/2		406.4	115.8	6.6	1
80	3		203.2	115.8	4.0	1
100	4		431.8	218.9	17.7	3
125	5		304.8	218.9	16.1	3
150	6		304.8	218.9	16.1	3
200	8		406.4	323.9	29.3	6
250	10		406.4	323.9	41.4	8
300	12		711.2	406.4	81.8	14
350	14		1016.0	508.0	147.4	20
400	16		1016.0	609.6	204.1	26
450	18		1016.0	609.6	204.1	34
500	20		1016.0	609.6	204.1	34

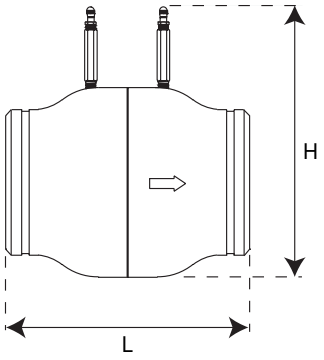

MODEL NUMBER SELECTION

FG3 _____ . _____ . __B__

Insert body size:
22=50mm, 2" 23=65mm, 2 1/2" 10=80mm, 3" 11=100mm, 4"
12=125mm, 5" 13=150mm, 6" 14=200mm, 8" 15=250mm, 10"
16=300mm, 12" 17=350mm, 14" 18=400mm, 16" 19=450mm, 18"
70=500mm, 20"

Insert a kPaD control range:
STANDARD: 1=10-135 kPaD and 28-135 kPaD 2=22-210 kPaD and 55-210 kPaD 4=40-390 kPaD 8=90-880 kPaD
HI-FLOW: 3=20-125 kPaD 5=35-220 kPaD

Insert p/t plug requirement:
B=Pressure/temperature plugs (standard)

Example: FG313.0.B=Grooved End 150mm with p/t plugs and no cartridge.
Note: Please specify flow requirements as per selection chart when ordering with cartridges.

FLOW RATE TABLE PER TYPE OF CARTRIDGE

80mm · 3" · stainless steel cartridge, standard flow							
			Pressure range, ΔP:	10-135 kPaD 1-20 psid	22-210 kPaD 2-32 psid	40-390 kPaD 4-57 psid	90-880 kPaD 8-128 psid
				Type 1	**Type 2**	**Type 4**	**Type 8**
Valve size (mm)	**Valve size (")**	**Max no. of cartriges**	**min. available l/sec**	**0.883**	**1.10**	**1.47**	**2.21**
			l/sec increments	**0.126**	**0.160**	**0.210**	**0.316**
50	2	1	Max. available l/sec	3.79	4.73	6.31	9.46
65	2 1/2	1		3.79	4.73	6.31	9.46
80	3	1		3.79	4.73	6.31	9.46
100	4	3		11.37	14.19	18.93	28.38
125	5	3		11.37	14.19	18.93	28.38
150	6	3		11.37	14.19	18.93	28.38
200	8	6		22.74	28.38	37.86	56.76
250	10	8		30.32	37.84	50.48	75.68
300	12	14		53.06	66.22	88.34	132.44
350	14	20		75.80	94.60	126.20	189.20
400	16	26		98.54	122.98	164.06	245.96
450	18	34		128.86	160.82	214.54	321.64
500	20	34		128.86	160.82	214.54	321.64

Accuracy: ±5% of controlled flow rate.

80mm · 3" · stainless steel cartridge, high capacity					
			Pressure range, ΔP:	28-135 kPaD 4-20 psid	55-210 kPaD 8-32 psid
				Type 1	**Type 2**
Valve size (mm)	**Valve size (")**	**Max no. of cartriges**	**min. available l/sec**	**5.68**	**6.94**
			l/sec increments	**1.26**	**1.58**
50	2	1	Max. available l/sec	8.2	10.1
65	2 1/2	1		8.2	10.1
80	3	1		8.2	10.1
100	4	3		24.6	30.3
125	5	3		24.6	30.3
150	6	3		24.6	30.3
200	8	6		49.2	60.6
250	10	8		65.6	80.8
300	12	14		114.8	141.4
350	14	20		164.0	202.0
400	16	26		213.2	262.6
450	18	34		278.8	343.4
500	20	34		278.8	343.4

Accuracy: ±5% of controlled flow rate.

80mm · 3" · stainless steel cartridge, high flow					
			Pressure range, ΔP:	20-125 kPaD 3-18 psid	35-220 kPaD 5-32 psid
				Type 3	**Type 5**
Valve size (mm)	**Valve size (")**	**Max no. of cartriges**	**min. available l/sec**	**6.31**	**8.52**
			l/sec increments	**N/A**	**N/A[1]**
50-80	2-3	1	Minimum l/sec	6.31	12.6
			Maximum l/sec		
100	4	3	Max. available l/sec	18.93	37.83
125	5	3		18.93	37.83
150	6	3		18.93	37.83
200	8	6		37.86	75.60
250	10	8		50.48	100.80
300	12	14		88.34	176.40
350	14	20		126.20	252.20
400	16	26		164.06	327.60
450	18	34		214.54	428.40
500	20	34		214.54	428.40

Accuracy: ±5% of controlled flow rate.
Note 1: For flow rates in between min. and max. please contact FlowCon.

GENERAL SPECIFICATIONS

1. AUTOMATIC BALANCING VALVES - GROOVED END

1.1. Contractor shall install automatic balancing valves where indicated in drawings.
1.2. Valve shall consist of a dynamic, flow limiting device.

2. VALVE HOUSING

2.1. Valve housing shall consist of steel pipe, schedule 40 or greater, rated at no less than 2500 kPa static pressure and +95°C.
2.2. Valve housing shall be permanently marked to show direction of flow.
2.3. Dual pressure/temperature test plugs for verifying accuracy of flow performance shall be provided for all valve sizes.
2.4. Valve housing shall be compatible with grooved end clamps.

3. FLOW REGULATOR / AUTOMATIC BALANCING UNIT

3.1. Flow regulation unit assembly shall be manufactured of AISI type 304 stainless steel and stainless steel 17-7 spring.
3.2. Flow regulation unit shall be available in 4 different kPaD operational range; minimum range shall be capable of being activated by minimum 10 kPaD. Further, the flow regulation unit shall be capable of controlling flow within ±5% of rated flow.
3.3. Identification tags shall be available for all valves; tags shall be indelibly marked with part number and flow rate.

UPDATES

For latest updates please see www.flowcon.com

FlowCon Inserts/Cartridges

FlowCon Green Inserts, E-JUST Cartridges,
Composite Cartridges and Stainless Steel Cartridges

FlowCon Green Inserts

Pressure Independent Control Valves

The FlowCon Green inserts ensure that the design flow will never be exceeded and with the matching modulating actuator any flow rate between closed and design flow is obtainable regardless of pressure fluctuations in the system maintaining 100% authority on the actuator always using full valve stoke independent of pre-set maximum flow.

Adjustment

The valve is adjusted to a maximum flow rate limit by setting the scale located on the top of the Green insert. The setting indicates one of maximum 41 possible max flow rates, but since the setting is step less, any flow rate in between minimum and maximum is obtainable. The setting is done by means of a special FlowCon key. With the actuator mounted, the pre-setting is “sealed” and the FlowCon Green insert eliminates any flow above the design flow.

For re-adjustment, simply remove power from the actuator and then remove the actuator from the valve. Hereafter dial in a new required maximum flow and re-apply the actuator and re-apply the power.

Applications

The FlowCon Green inserts can be used with the following FlowCon valves:

- *FlowCon A (DN15/20/25)*
- *FlowCon AB (DN15/20/25/32)*
- *FlowCon ABV1 (DN15/20/25)*
- *FlowCon ABV2 (DN25/32/40)*

Principle of Insert Operation

On closer examination of the inner workings of the FlowCon Green, the function is best described as 2 valves in 1. The second valve (V2) regulates the pressure differential across the first valve (V1) by means of a rolling diaphragm element counter-acted by a spring. The first valve is a calibrated variable orifice device adjusted by the actuator (similar to a standard modulating control valve).

The diaphragm reacts to the system and regulates the pressure differential across the actuated control valve orifice to maintain its flow rate.

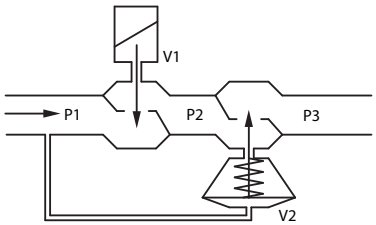

When pre-setting the maximum flow rate, the inlet orifice is changed in size sideways which does not interfere with the length of the stroke. When modulating, the orifice areas are affected by the actuator using the full stroke which results in the fact that the orifice area is changed in size in a vertical movement.

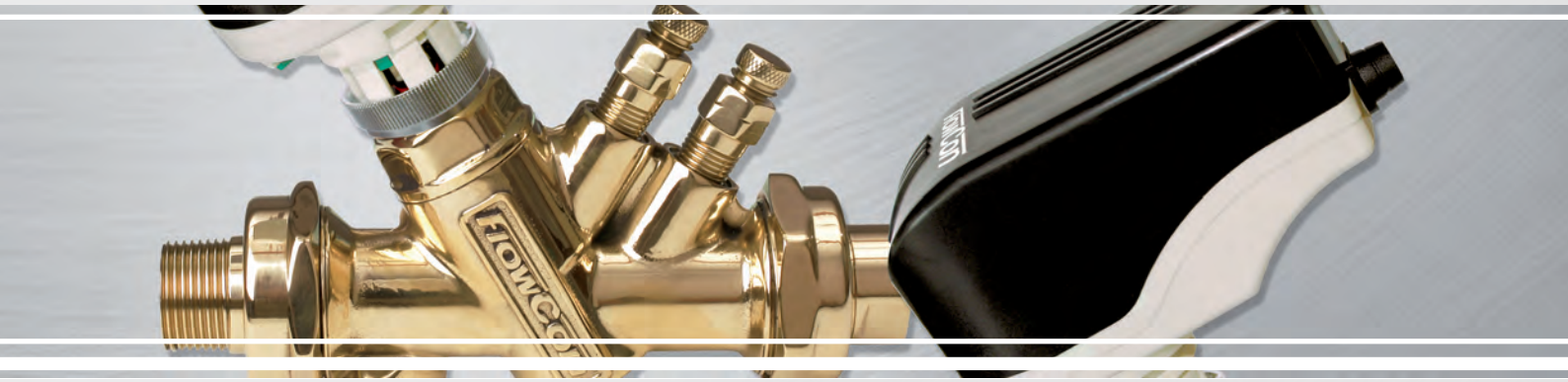

20mm (3/4”) and 40mm (1 1/2”) Green Inserts for DN15-DN40 Valves

	FlowCon Green									Setting
	Insert: 20mm, 3/4”						Insert: 40mm , 1 1/2”			
Nominal flow rate	16-200 kPaD · 2.3-29 psid			30-400 kPaD · 4.4-58 psid			16-400 kPaD* · 2.3-58 psid*			
	Green.0 (green o-ring)			**Green.1** (black o-ring)			**Green.2** (black o-ring)			
	l/sec	l/hr	GPM	l/sec	l/hr	GPM	l/sec	l/hr	GPM	
	0.0089	32.0	0.141	0.0178	64	0.282	0.240	865	3.81	1.0
	0.0211	75.8	0.334	0.0393	142	0.624	0.282	1010	4.46	1.1
	0.0323	116	0.511	0.0580	209	0.920	0.322	1160	5.10	1.2
	0.0426	153	0.675	0.0743	268	1.180	0.361	1300	5.72	1.3
	0.0521	188	0.826	0.0887	319	1.41	0.399	1430	6.32	1.4
	0.0610	220	0.967	0.102	366	1.61	0.435	1570	6.90	1.5
	0.0693	250	1.10	0.113	408	1.80	0.471	1700	7.47	1.6
	0.0771	278	1.22	0.124	446	1.96	0.506	1820	8.02	1.7
	0.0844	304	1.34	0.134	482	2.12	0.540	1940	8.56	1.8
	0.0913	329	1.45	0.143	516	2.27	0.573	2060	9.08	1.9
	0.0978	352	1.55	0.152	549	2.42	0.605	2180	9.59	2.0
	0.104	374	1.65	0.161	580	2.56	0.636	2290	10.1	2.1
	0.110	396	1.74	0.170	611	2.69	0.667	2400	10.6	2.2
	0.115	416	1.83	0.178	641	2.82	0.696	2510	11.0	2.3
	0.121	435	1.92	0.186	671	2.95	0.725	2610	11.5	2.4
	0.126	453	2.00	0.194	700	3.08	0.753	2710	11.9	2.5
	0.131	471	2.07	0.202	728	3.21	0.780	2810	12.4	2.6
	0.136	488	2.15	0.210	756	3.33	0.807	2900	12.8	2.7
	0.140	504	2.22	0.218	783	3.45	0.832	3000	13.2	2.8
	0.144	520	2.29	0.225	810	3.56	0.858	3090	13.6	2.9
	0.149	535	2.35	0.232	835	3.68	0.882	3180	14.0	3.0
	0.153	549	2.42	0.239	860	3.79	0.906	3260	14.4	3.1
	0.156	563	2.48	0.245	883	3.89	0.930	3350	14.7	3.2
	0.160	577	2.54	0.252	906	3.99	0.953	3430	15.1	3.3
	0.164	590	2.60	0.257	927	4.08	0.975	3510	15.5	3.4
	0.167	602	2.65	0.263	946	4.17	0.997	3590	15.8	3.5
	0.171	614	2.70	0.268	965	4.25	1.02	3670	16.1	3.6
	0.174	626	2.76	0.273	982	4.32	1.04	3740	16.5	3.7
	0.177	637	2.81	0.277	998	4.39	1.06	3820	16.8	3.8
	0.180	649	2.86	0.281	1010	4.46	1.08	3890	17.1	3.9
	0.183	659	2.90	0.285	1020	4.51	1.10	3960	17.4	4.0
	0.186	670	2.95	0.288	1040	4.57	1.12	4030	17.7	4.1
	0.189	681	3.00	0.291	1050	4.61	1.14	4100	18.1	4.2
	0.192	691	3.04	0.294	1060	4.66	1.16	4170	18.4	4.3
	0.195	701	3.09	0.296	1070	4.70	1.18	4240	18.7	4.4
	0.197	711	3.13	0.299	1080	4.73	1.20	4300	19.0	4.5
	0.200	721	3.17	0.301	1080	4.77	1.21	4370	19.2	4.6
	0.203	730	3.22	0.303	1090	4.80	1.23	4440	19.5	4.7
	0.205	740	3.26	0.305	1100	4.83	1.25	4500	19.8	4.8
	0.208	749	3.30	0.307	1100	4.86	1.27	4570	20.1	4.9
	0.210	757	3.33	0.308	1110	4.89	1.29	4630	20.4	5.0

Accuracy: Greatest of either ±10% of controlled flow rate or ±5% of maximum flow rate.
*at setting 2.6.

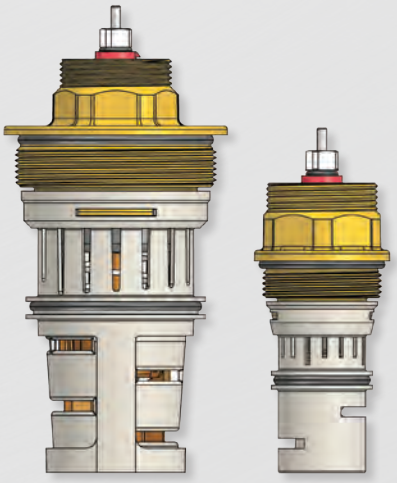

FlowCon E-JUST Cartridges

Externally Adjustable Flow Rate Cartridges for FlowCon Valves

The E-JUST automatic flow rate cartridges ensure that the design flow will not be exceeded regardless of pressure fluctuations in the system.

Adjustment

By means of a specially designed key each cartridge can be easily adjusted to one of 41 different flow rates. Adjustment is managed externally without isolating the valve or removing the cartridge from the system, which means that the desired maximum flow rate can be set while the system is operating.

The adjustment key turns the display mechanism and the graduation on the 'handle' of the cartridge shows the setting indicated by two scales; one black reflecting full turns numbered 1 through 5, and one red at the top reflecting tenths of full turns numbered 0 through 9. The number of turns reflects the flow rate selected (please see the next 5 pages in this brochure). The color of the pawl shows the selected control range, e.g. white = 17-210 kPaD for the 20mm black and green cartridges.

The FlowCon E-JUST cartridge is tamper-proof since the adjustment is operated by means of the mentioned special key. Further, the setting can be protected with a colored top cover. The color of the cover and the o-ring on the spindle under the cover indicates the color and flow range of the cartridge, e.g. red for flow rates between 0.113-0.352 l/sec, ΔP 30-400 kPaD (grey pawl). E-JUST cartridges size 40mm and 50mm will, as standard, always be with a black cover and black o-ring, as only one type per size is available.

Principle of Cartridge Operation

The principle of operation is shown below. P1 and P3 are system pressures. P1÷P3 is the total pressure drop across the valve. P2 is set by the diaphragm acting in reaction to P1 in the upper diaphragm chamber. Interacting with the spring, P1÷P2 remains constant, keeping a constant ΔP across the orifice areas. The result is a constant flow rate through the valve, independent of pressure fluctuations.

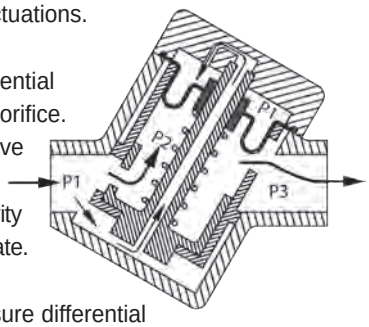

Below its pressure differential range, it acts as a fixed orifice. This allows a control valve in the same circuit to operate with valve authority up to the specified flow rate.

Within the defined pressure differential regulation range the pump supplies sufficient pressure to affect the spring and diaphragm in the cartridge.

In case the differential pressure is higher than the defined max. ΔP for the cartridge, the diaphragm may be damaged.

Applications

The 20mm, 40mm and 50mm E-JUST cartridges can be used with the following FlowCon valves:

20mm E-JUST:	*- FlowCon A (DN15/20/25)*
	- FlowCon AB (DN15/20/25)
	- FlowCon ABV1 (DN15/20/25)
	- FlowCon EVC (DN15/20)
	- FlowCon ABM1 (DN15/20/25)
40mm E-JUST:	*- FlowCon AB (DN25/32)*
	- FlowCon ABV2 (DN25/32/40)
	- FlowCon ABM2 (DN25/32/40)
50mm E-JUST:	*- FlowCon AB (DN40/50)*

20mm (3/4”) E-JUST Cartridges for DN15-DN25 Valves

20mm · 3/4” · E-JUST · Y-type · White pawl					
Pressure range, ΔP: 17-210 kPaD · 2.5-30 psid					
			Model no.	E-JUST1.Y.B	E-JUST1.Y.G
				Black	Green
	l/sec	l/hr	GPM	Setting	Setting
Nominal flow rate	0.0278	100	0.440	1.0	
	0.0299	108	0.475	1.1	
	0.0321	116	0.509	1.2	
	0.0343	123	0.543	1.3	
	0.0364	131	0.578	1.4	
	0.0386	139	0.612	1.5	
	0.0408	147	0.646	1.6	
	0.0429	155	0.681	1.7	
	0.0436	157	0.691		1.0
	0.0451	162	0.715	1.8	
	0.0468	168	0.741		1.1
	0.0473	170	0.749	1.9	
	0.0494	178	0.784	2.0	
	0.0499	180	0.791		1.2
	0.0516	186	0.818	2.1	
	0.0530	191	0.841		1.3
	0.0538	194	0.852	2.2	
	0.0559	201	0.887	2.3	
	0.0562	202	0.890		1.4
	0.0581	209	0.921	2.4	
	0.0593	214	0.940		1.5
	0.0603	217	0.955	2.5	
	0.0624	225	0.990	2.6	1.6
	0.0646	233	1.02	2.7	
	0.0656	236	1.04		1.7
	0.0668	240	1.06	2.8	
	0.0687	247	1.09		1.8
	0.0689	248	1.09	2.9	
	0.0711	256	1.13	3.0	
	0.0719	259	1.14		1.9
	0.0733	264	1.16	3.1	
	0.0750	270	1.19		2.0
	0.0754	272	1.20	3.2	
	0.0776	279	1.23	3.3	
	0.0781	281	1.24		2.1
	0.0798	287	1.26	3.4	
	0.0813	293	1.29		2.2
	0.0819	295	1.30	3.5	
	0.0841	303	1.33	3.6	
	0.0844	304	1.34		2.3
	0.0863	311	1.37	3.7	
	0.0876	315	1.39		2.4
	0.0884	318	1.40	3.8	

Continue next column...

20mm · 3/4” · E-JUST · Y-type · White pawl					
Pressure range, ΔP: 17-210 kPaD · 2.5-30 psid					
			Model no.	E-JUST1.Y.B	E-JUST1.Y.G
				Black	Green
	l/sec	l/hr	GPM	Setting	Setting
Nominal flow rate	0.0906	326	1.44	3.9	
	0.0907	327	1.44		2.5
	0.0928	334	1.47	4.0	
	0.0938	338	1.49		2.6
	0.0949	342	1.50	4.1	
	0.0970	349	1.54		2.7
	0.0971	350	1.54	4.2	
	0.0993	357	1.57	4.3	
	0.100	360	1.59		2.8
	0.101	365	1.61	4.4	
	0.103	372	1.64		2.9
	0.104	373	1.64	4.5	
	0.106	381	1.68	4.6	
	0.106	383	1.69		3.0
	0.108	389	1.71	4.7	
	0.110	394	1.74		3.1
	0.110	396	1.75	4.8	
	0.112	404	1.78	4.9	
	0.113	406	1.79		3.2
	0.114	412	1.81	5.0	
	0.116	417	1.84		3.3
	0.119	428	1.89		3.4
	0.122	440	1.94		3.5
	0.125	451	1.98		3.6
	0.128	462	2.03		3.7
	0.132	473	2.08		3.8
	0.135	485	2.13		3.9
	0.138	496	2.18		4.0
	0.141	507	2.23		4.1
	0.144	519	2.28		4.2
	0.147	530	2.33		4.3
	0.150	541	2.38		4.4
	0.153	553	2.43		4.5
	0.157	564	2.48		4.6
	0.160	575	2.53		4.7
	0.163	586	2.58		4.8
	0.166	598	2.63		4.9
	0.169	609	2.68		5.0

Accuracy: Greatest of
either ±5% of controlled flow rate
or ±2% of maximum flow rate

FlowCon E-JUST Cartridges

20mm (3/4”) E-JUST Cartridges for DN15-DN25 Valves

20mm · 3/4” · E-JUST · Y-type · White pawl			
Pressure range. ΔP: 17-200 kPaD · 2.5-29 psid			
			Model no. E-JUST1.Y.R
Nominal flow rate			Red
l/sec	l/hr	GPM	Setting
0.0767	276	1.22	1.0
0.0813	293	1.29	1.1
0.0860	310	1.36	1.2
0.0907	326	1.44	1.3
0.0953	343	1.51	1.4
0.100	360	1.58	1.5
0.105	377	1.66	1.6
0.109	393	1.73	1.7
0.114	410	1.80	1.8
0.118	426	1.88	1.9
0.123	443	1.95	2.0
0.128	459	2.02	2.1
0.132	475	2.09	2.2
0.136	491	2.16	2.3
0.141	507	2.23	2.4
0.145	523	2.30	2.5
0.150	539	2.37	2.6
0.154	554	2.44	2.7
0.158	569	2.51	2.8
0.162	584	2.57	2.9
0.166	599	2.64	3.0
0.170	614	2.70	3.1
0.174	628	2.76	3.2
0.178	642	2.83	3.3
0.182	655	2.89	3.4
0.186	669	2.94	3.5
0.189	682	3.00	3.6
0.193	695	3.06	3.7
0.196	707	3.11	3.8
0.200	719	3.17	3.9
0.203	731	3.22	4.0
0.206	742	3.27	4.1
0.209	753	3.32	4.2
0.212	764	3.36	4.3
0.215	774	3.41	4.4
0.218	784	3.45	4.5
0.220	793	3.49	4.6
0.223	802	3.53	4.7
0.225	810	3.57	4.8
0.227	818	3.60	4.9
0.229	825	3.60	5.0

Accuracy: Greatest of
either ±5% of controlled flow rate
or ±2% of maximum flow rate

20mm · 3/4” · E-JUST · G-type · Grey pawl			
Pressure range. ΔP: 30-400 kPaD · 4.4-58 psid			
			Model no. E-JUST1.G.R
Nominal flow rate			Red
l/sec	l/hr	GPM	Setting
0.113	406	1.79	1.0
0.119	427	1.88	1.1
0.125	449	1.98	1.2
0.131	470	2.07	1.3
0.137	492	2.17	1.4
0.143	513	2.26	1.5
0.149	535	2.36	1.6
0.155	556	2.45	1.7
0.161	578	2.54	1.8
0.167	599	2.64	1.9
0.172	621	2.73	2.0
0.178	642	2.83	2.1
0.184	664	2.92	2.2
0.190	685	3.02	2.3
0.196	707	3.11	2.4
0.202	728	3.21	2.5
0.208	750	3.30	2.6
0.214	771	3.40	2.7
0.220	793	3.49	2.8
0.226	814	3.59	2.9
0.232	836	3.68	3.0
0.238	857	3.78	3.1
0.244	879	3.87	3.2
0.250	900	3.96	3.3
0.256	922	4.06	3.4
0.262	943	4.15	3.5
0.268	965	4.25	3.6
0.274	987	4.34	3.7
0.280	1010	4.44	3.8
0.286	1030	4.53	3.9
0.292	1050	4.63	4.0
0.298	1070	4.72	4.1
0.304	1090	4.82	4.2
0.310	1120	4.91	4.3
0.316	1140	5.01	4.4
0.322	1160	5.10	4.5
0.328	1180	5.20	4.6
0.334	1200	5.29	4.7
0.340	1220	5.38	4.8
0.346	1240	5.48	4.9
0.352	1270	5.57	5.0

Accuracy: Greatest of
either ±5% of controlled flow rate
or ±2% of maximum flow rate

FlowCon E-JUST Cartridges

20mm (3/4”) E-JUST Cartridges for DN15-DN25 Valves

20mm · 3/4” · E-JUST · G-type · Grey pawl					
Pressure range, ΔP: 35-400 kPaD · 5.1-58 psid					
			Model no.	E-JUST1.G.B	E-JUST1.G.G
				Black	Green
	l/sec	l/hr	GPM	Setting	Setting
Nominal flow rate	0.0383	138	0.607	1.0	
	0.0416	150	0.660	1.1	
	0.0449	162	0.712	1.2	
	0.0483	174	0.765	1.3	
	0.0516	186	0.817	1.4	
	0.0549	198	0.870	1.5	
	0.0582	210	0.922	1.6	
	0.0615	221	0.975	1.7	
	0.0648	233	1.03	1.8	
	0.0660	238	1.05		1.0
	0.0681	245	1.08	1.9	
	0.0706	254	1.12		1.1
	0.0714	257	1.13	2.0	
	0.0748	269	1.18	2.1	
	0.0751	271	1.19		1.2
	0.0781	281	1.24	2.2	
	0.0797	287	1.26		1.3
	0.0814	293	1.29	2.3	
	0.0843	304	1.34		1.4
	0.0847	305	1.34	2.4	
	0.0880	317	1.40	2.5	
	0.0889	320	1.41		1.5
	0.0913	329	1.45	2.6	
	0.0934	336	1.48		1.6
	0.0946	341	1.50	2.7	
	0.0979	353	1.55	2.8	
	0.0980	353	1.55		1.7
	0.101	365	1.61	2.9	
	0.103	369	1.63		1.8
	0.105	377	1.66	3.0	
	0.107	386	1.70		1.9
	0.108	388	1.71	3.1	
	0.111	400	1.76	3.2	
	0.112	402	1.77		2.0
	0.115	412	1.82	3.3	
	0.116	419	1.84		2.1
	0.118	424	1.87	3.4	
	0.121	435	1.92		2.2
	0.121	436	1.92	3.5	
	0.124	448	1.97	3.6	
	0.125	452	1.99		2.3
	0.128	460	2.03	3.7	
	0.130	468	2.06		2.4
	0.131	472	2.08	3.8	
	0.134	484	2.13	3.9	
	0.135	485	2.13		2.5
	0.138	496	2.18	4.0	
	0.139	501	2.21		2.6
	0.141	508	2.24	4.1	
	0.144	517	2.28		2.7
	0.144	520	2.29	4.2	
	0.148	532	2.34	4.3	
	0.148	534	2.35		2.8
	0.151	544	2.39	4.4	
	0.153	550	2.42		2.9
	0.154	556	2.45	4.5	
	0.157	567	2.50		3.0
	0.158	567	2.50	4.6	
	0.161	579	2.55	4.7	
	0.162	583	2.57		3.1
	0.164	591	2.60	4.8	
	0.167	600	2.64		3.2
	0.168	603	2.66	4.9	
	0.171	615	2.71	5.0	

Continue next column...

20mm · 3/4” · E-JUST · G-type · Grey pawl					
Pressure range, ΔP: 35-400 kPaD · 5.1-58 psid					
			Model no.	E-JUST1.G.B	E-JUST1.G.G
				Black	Green
	l/sec	l/hr	GPM	Settings	Settings
Nominal flow rate	0.171	616	2.71		3.3
	0.176	633	2.79		3.4
	0.180	649	2.86		3.5
	0.185	666	2.93		3.6
	0.189	682	3.00		3.7
	0.194	699	3.08		3.8
	0.199	715	3.15		3.9
	0.203	731	3.22		4.0
	0.208	748	3.29		4.1
	0.212	764	3.37		4.2
	0.217	781	3.44		4.3
	0.221	797	3.51		4.4
	0.226	814	3.58		4.5
	0.231	830	3.66		4.6
	0.235	847	3.73		4.7
	0.240	863	3.80		4.8
	0.244	880	3.87		4.9
	0.249	896	3.95		5.0

Accuracy: Greatest of either
±5% of controlled flow rate or
±2% of maximum flow rate

FlowCon E-JUST Cartridges

40mm (1 1/2”) E-JUST Cartridges for DN25-DN40 Valves

40mm · 1 1/2” · E-JUST · Y-type · White pawl				
Pressure range, ΔP: 17-400 kPaD · 2.5-58 psid				
			Model no.	E-JUST2.Y.G
Nominal flow rate	l/sec	l/hr	GPM	Setting
	0.149	535	2.36	1.0
	0.220	793	3.49	1.1
	0.289	1040	4.58	1.2
	0.355	1280	5.63	1.3
	0.418	1510	6.63	1.4
	0.479	1730	7.60	1.5
	0.538	1940	8.52	1.6
	0.594	2140	9.41	1.7
	0.647	2330	10.3	1.8
	0.699	2520	11.1	1.9
	0.748	2690	11.9	2.0
	0.795	2860	12.6	2.1
	0.841	3030	13.3	2.2
	0.884	3180	14.0	2.3
	0.925	3330	14.7	2.4
	0.965	3470	15.3	2.5
	1.00	3610	15.9	2.6
	1.04	3740	16.5	2.7
	1.07	3870	17.0	2.8
	1.11	3990	17.6	2.9
	1.14	4100	18.1	3.0
	1.17	4220	18.6	3.1
	1.20	4320	19.0	3.2
	1.23	4420	19.5	3.3
	1.26	4520	19.9	3.4
	1.28	4620	20.3	3.5
	1.31	4710	20.7	3.6
	1.33	4800	21.1	3.7
	1.36	4890	21.5	3.8
	1.38	4970	21.9	3.9
	1.40	5050	22.3	4.0
	1.43	5130	22.6	4.1
	1.45	5210	23.0	4.2
	1.47	5290	23.3	4.3
	1.49	5370	23.6	4.4
	1.51	5440	24.0	4.5
	1.53	5520	24.3	4.6
	1.55	5600	24.6	4.7
	1.58	5670	25.0	4.8
	1.60	5750	25.3	4.9
	1.62	5830	25.7	5.0

Accuracy: Greatest of
either ±5% of controlled flow rate
or ±2% of maximum flow rate

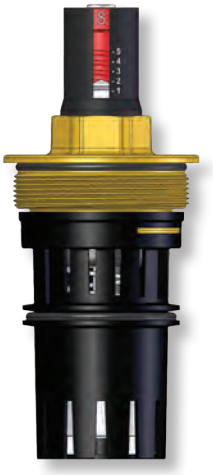

FlowCon E-JUST Cartridges

50mm (2”) E-JUST Cartridges for DN40 and DN50 Valves

50mm · 2” · E-JUST · G-type · Grey pawl				
Pressure range. ΔP: 20-400 kPaD · 2.9-58 psid				
			Model no.	E-JUST3.G.B
Nominal flow rate	l/sec	l/hr	GPM	Setting
	0.883	3180	14.0	1.0
	1.14	4100	18.0	1.1
	1.37	4940	21.7	1.2
	1.59	5710	25.1	1.3
	1.78	6420	28.3	1.4
	1.96	7070	31.1	1.5
	2.13	7660	33.7	1.6
	2.28	8200	36.1	1.7
	2.42	8700	38.3	1.8
	2.54	9150	40.3	1.9
	2.66	9570	42.1	2.0
	2.77	9960	43.8	2.1
	2.86	10300	45.4	2.2
	2.95	10600	46.8	2.3
	3.04	10900	48.2	2.4
	3.12	11200	49.4	2.5
	3.19	11500	50.6	2.6
	3.26	11700	51.7	2.7
	3.32	12000	52.7	2.8
	3.39	12200	53.7	2.9
	3.45	12400	54.6	3.0
	3.51	12600	55.6	3.1
	3.56	12800	56.5	3.2
	3.62	13000	57.3	3.3
	3.67	13200	58.2	3.4
	3.73	13400	59.1	3.5
	3.78	13600	59.9	3.6
	3.83	13800	60.8	3.7
	3.89	14000	61.6	3.8
	3.94	14200	62.4	3.9
	3.99	14400	63.3	4.0
	4.05	14600	64.1	4.1
	4.10	14800	65.0	4.2
	4.15	14900	65.8	4.3
	4.20	15100	66.6	4.4
	4.25	15300	67.4	4.5
	4.30	15500	68.2	4.6
	4.35	15700	68.9	4.7
	4.39	15800	69.6	4.8
	4.44	16000	70.3	4.9
	4.48	16100	70.9	5.0

Accuracy: Greatest of
either ±5% of controlled flow rate
or ±2% of maximum flow rate

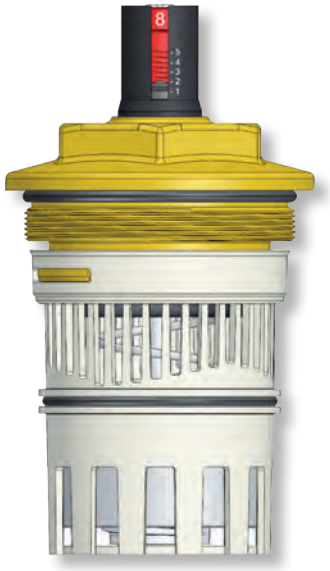

FlowCon Composite Cartridges

Adjustable Flow Rate Cartridges for FlowCon Valves

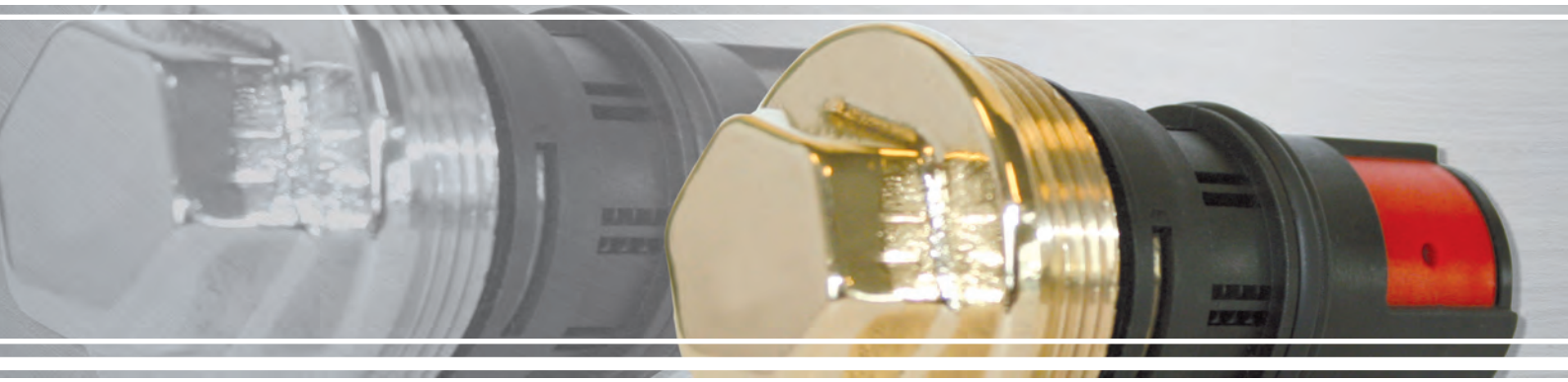

20mm (3/4”) Composite Cartridges for DN15-DN25 Valves

20mm · 3/4” · composite cartridge · Y-type

Pressure range, ΔP:
20-130 kPaD (15-130 kPaD)* · 2.9-18.9 psid (2.2-18.9 psid)*

Nominal flow rate			Model no.	ABV1.Y.Y	ABV1.Y.R	ABV1.Y.U	ABV1.Y.B	ABV1.Y.G
l/sec	l/hr	GPM		Grey*	Red	Blue	Black	Green
0.0081	29.2	0.128		1				
0.0133	47.9	0.211		2				
0.0175	63.0	0.277		3				
0.0222	79.9	0.352		4				
0.0311	112	0.493		5				
0.0353	127	0.560		6				
0.0383	138	0.607		7				
0.0431	155	0.683		8				
0.0450	162	0.713					3	
0.0575	207	0.911			4			
0.0619	223	0.981				4		
0.0669	241	1.06					4	
0.0922	332	1.46			5			
0.0978	352	1.55						1
0.105	378	1.66			6			
0.114	409	1.80			7			
0.115	415	1.83				5		
0.118	426	1.88						2
0.119	430	1.89			8			
0.136	489	2.15						3
0.137	492	2.17				6		
0.138	498	2.19						4
0.146	524	2.31				7		
0.146	526	2.32				8		
0.155	557	2.45					5	
0.176	635	2.80					6	
0.180	647	2.85					7	
0.193	695	3.06					8	
0.231	830	3.66						5
0.237	854	3.76						6
0.253	909	4.00						7
0.273	984	4.33						8

Accuracy: Greatest of either ±10% of controlled flow rate or 20 l/hr (0.0056 l/sec or 0.088 GPM).

20mm · 3/4” · composite cartridge · G-type

Pressure range, ΔP:
40-400 kPaD (30-400 kPaD)* · 5.8-58 psid (4.4-58 psid)*

Nominal flow rate			Model no.	ABV1.G.Y	ABV1.G.R	ABV1.G.U	ABV1.G.B	ABV1.G.G
l/sec	l/hr	GPM		Grey*	Red	Blue	Black	Green
0.0117	42.1	0.185		1				
0.0189	68.0	0.300		2				
0.0247	88.9	0.392		3				
0.0325	117	0.515		4				
0.0472	170	0.748		5				
0.0528	190	0.837		6				
0.0564	203	0.894				3		
0.0597	215	0.946					3	
0.0639	230	1.01		7				
0.0694	250	1.10		8				
0.0781	281	1.24			4			
0.0908	327	1.44				4		
0.0958	345	1.52					4	
0.137	493	2.17			5			
0.147	529	2.33						1
0.161	581	2.56			6			
0.173	624	2.75			7			
0.181	652	2.87				5		
0.181	653	2.88			8			
0.186	670	2.95						2
0.210	755	3.32						3
0.216	779	3.43				6		
0.218	785	3.46				7		
0.220	792	3.49				8		
0.237	853	3.75					5	
0.241	869	3.83						4
0.266	957	4.21					6	
0.269	968	4.26					7	
0.277	998	4.39					8	
0.365	1320	5.79						5
0.369	1330	5.85						6
0.392	1410	6.21						7
0.408	1470	6.46						8

Accuracy: Greatest of either ±10% of controlled flow rate or 20 l/hr (0.0056 l/sec or 0.088 GPM).

The composite automatic flow rate cartridges ensure that the design flow will not be exceeded regardless of pressure fluctuations in the system.

Adjustment

By means of a Hex key each cartridge can be easily adjusted to one of eight different flow rates. Adjustment is managed 'internally' and therefore the valve must be isolated and the cartridge removed from the valve body, before adjusting is possible.

The groove at the bottom of the cartridge indicates the selected flow rate setting, numbered 1 through 8 (please see below and previous page). The color of the cartridge shows the selected flow range and the letter stamped on the cap of the cartridge indicates the control range, e.g. Y-GREEN = 20-130 kPaD and flow rates from 0.0978-0.273 l/sec.

Applications and Principle of Cartridge Operation

are similar to the ones for E-JUST cartridge.

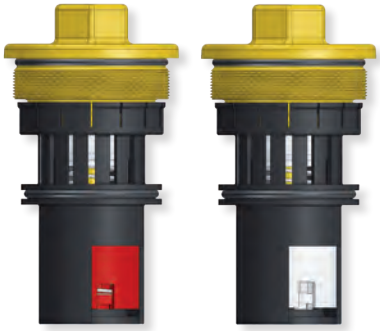

40mm (1 1/2") Composite Cartridges for DN25-DN40 Valves

	40mm · 1 1/2" composite cartridge · X-type					40mm · 1 1/2" composite cartridge · C-type					40mm · 1 1/2" composite cartridge · D-type				
	Pressure range, ΔP: 15-130 kPaD · 2.2-18.9 psid					Pressure range, ΔP: 22-300 kPaD · 3.2-43.5 psid					Pressure range, ΔP: 30-410 kPaD · 4.4-59.5 psid				
			Model no.	ABV2.X.W	ABV2.X.R			Model no.	ABV2.C.W	ABV2.C.R			Model No.	ABV2.D.W	ABV2.D.R
Nominal flow rate	l/sec	l/hr	GPM	White	Red	l/sec	l/hr	GPM	White	Red	l/sec	l/hr	GPM	White	Red
	0.17	612	2.69	1		0.23	828	3.65	1		0.27	972	4.28	1	
	0.23	828	3.64	2		0.31	1120	4.91	2		0.36	1300	5.71	2	
	0.26	936	4.12		1	0.38	1370	6.02		1	0.44	1580	6.97		1
	0.33	1190	5.23	3		0.42	1510	6.66	3		0.52	1870	8.24	3	
	0.38	1370	6.02	4		0.47	1690	7.45	4		0.58	2090	9.19	4	
	0.39	1400	6.18		2	0.50	1800	7.93		2	0.60	2160	9.51		2
	0.48	1730	7.61	5	3	0.60	2160	9.51	5		0.74	2660	11.7	5	
	0.54	1940	8.56	6		0.64	2300	10.1		3	0.76	2740	12.0		3
	0.62	2230	9.83	7		0.68	2450	10.8	6		0.83	2990	13.2	6	
	0.63	2270	9.99		4	0.78	2810	12.4	7		0.93	3350	14.7	7	
	0.66	2380	10.5	8		0.83	2990	13.2		4	0.99	3560	15.7	8	4
	0.67	2410	10.6		5	0.84	3020	13.3	8		1.07	3850	17.0		5
	0.76	2740	12.0		6	0.90	3240	14.3		5	1.28	4610	20.3		6
	0.85	3060	13.5		7	1.07	3850	17.0		6	1.39	5000	22.0		7
						1.17	4210	18.5		7	1.43	5150	22.7		8
						1.21	4360	19.2		8					

Accuracy: Greatest of either ±10% of controlled flow rate or 20 l/hr (0.0056 l/sec or 0.088 GPM).

Stainless Steel Cartridges

Pre-Set Flow Rate Cartridges for FlowCon Valves

The stainless steel flow rate cartridges ensure that the design flow will not be exceeded regardless of pressure fluctuations in the system. Since the cartridge is factory pre-set, the flow rate cannot be adjusted on the cartridge. The advantage of this type of cartridge is that it works at lower pressure differentials and with higher flows.

Principle of Operation

Below the stainless steel cartridge's pressure differential range it acts as a fixed orifice.

Within operating pressure differential range, the effective open orifice area of the cartridge is automatically adjusted to the point where the specified flow rate will be delivered (as the pressure differential increases, the open area closes and as it decreases, the area opens).

When the pressure differential range is exceeded, the valve again becomes a fixed orifice device. This ensures that no part of the system is starved or shut down.

20mm (3/4") Stainless Steel Cartridges for DN15-DN25 Valves

20mm · 3/4" · stainless steel cartridge											
Nominal flow rate	Pressure range, ΔP:			10-95 kPaD 1-14 psid		22-210 kPaD 2-32 psid		40-390 kPaD 4-57 psid		90-880 kPaD 8-128 psid	
				Type 1		Type 2		Type 4		Type 8	
	l/sec	l/hr	GPM	Marking	FlowCon	Marking	FlowCon	Marking	FlowCon	Marking	FlowCon
	0.0210	75.7	0.333	11-1	F360111						
	0.0315	114	0.500	01-1	F360101						
	0.0347	125	0.550			11-2	F360211				
	0.0421	151	0.667	02-1	F360102						
	0.0473	170	0.750			01-2	F360201	11-4	F360411		
	0.0631	227	1.00	03-1	F360103	02-2	F360202	01-4	F360401		
	0.0694	250	1.10							11-8	F360811
	0.0841	303	1.33	04-1	F360104			02-4	F360402		
	0.0946	341	1.50			03-2	F360203			01-8	F360801
	0.105	379	1.67	05-1	F360105						
	0.126	454	2.00	06-1	F360106	04-2	F360204	03-4	F360403	02-8	F360802
	0.147	530	2.33	07-1	F360107						
	0.158	568	2.50			05-2	F360205				
	0.168	606	2.67	08-1	F360108			04-4	F360404		
	0.189	681	3.00			06-2	F360206			03-8	F360803
	0.210	757	3.33	10-1	F360110			05-4	F360405		
	0.221	795	3.50			07-2	F360207				
	0.252	908	4.00	12-1	F360112	08-2	F360208	06-4	F360406	04-8	F360804
	0.294	1060	4.67	14-1	F360114			07-4	F360407		
	0.315	1140	5.00	16-1	F360116	10-2	F360210			05-8	F360805
	0.336	1210	5.33					08-4	F360408		
	0.379	1360	6.00			12-2	F360212			06-8	F360806
	0.421	1510	6.67					10-4	F360410		
	0.442	1590	7.00			14-2	F360214			07-8	F360807
	0.505	1820	8.00			16-2	F360216	12-4	F360412	08-8	F360808
	0.589	2120	9.33					14-4	F360414		
	0.631	2270	10.0					16-4	F360416	10-8	F360810
	0.757	2730	12.0							12-8	F360812
	0.883	3180	14.0							14-8	F360814
	1.01	3630	16.0							16-8	F360816

Accuracy: ±5% of controlled flow rate.

40mm (1 1/2”) Stainless Steel Cartridges for DN25-DN40 Valves

40mm · 1 1/2” · stainless steel cartridge											
Nominal flow rate	Pressure range, ΔP:			10-95 kPaD 1-14 psid		22-210 kPaD 2-32 psid		40-390 kPaD 4-57 psid		90-880 kPaD 8-128 psid	
				Type 1		Type 2		Type 4		Type 8	
	l/sec	l/hr	GPM	Marking	FlowCon	Marking	FlowCon	Marking	FlowCon	Marking	FlowCon
	0.189	681	3.00	09-1	F361109						
	0.210	757	3.33	10-1	F361110						
	0.252	908	4.00	12-1	F361112						
	0.284	1020	4.50			09-2	F361209				
	0.294	1060	4.67	14-1	F361114						
	0.315	1140	5.00			10-2	F361210				
	0.336	1210	5.33	16-1	F361116						
	0.379	1360	6.00	18-1	F361118	12-2	F361212	09-4	F361409		
	0.421	1510	6.67	20-1	F361120			10-4	F361410		
	0.442	1590	7.00			14-2	F361214				
	0.463	1670	7.33	22-1	F361122						
	0.505	1820	8.00	24-1	F361124	16-2	F361216	12-4	F361412		
	0.547	1970	8.67	26-1	F361126						
	0.568	2040	9.00			18-2	F361218			09-8	F361809
	0.589	2120	9.33	28-1	F361128			14-4	F361414		
	0.631	2270	10.0	30-1	F361130	20-2	F361220			10-8	F361810
	0.673	2420	10.7	32-1	F361132			16-4	F361416		
	0.694	2500	11.0			22-2	F361222				
	0.715	2570	11.3	34-1	F361134						
	0.757	2730	12.0	36-1	F361136	24-2	F361224	18-4	F361418	12-8	F361812
	0.799	2880	12.7	38-1	F361138						
	0.820	2950	13.0			26-2	F361226				
	0.841	3030	13.3	40-1	F361140			20-4	F361420		
	0.883	3180	14.0	42-1	F361142	28-2	F361228			14-8	F361814
	0.925	3330	14.7	44-1	F361144			22-4	F361422		
	0.946	3410	15.0			30-2	F361230				
	1.01	3630	16.0			32-2	F361232	24-4	F361424	16-8	F361816
	1.07	3860	17.0			34-2	F361234				
	1.09	3940	17.3					26-4	F361426		
	1.14	4090	18.0			36-2	F361236			18-8	F361818
	1.18	4240	18.7					28-4	F361428		
	1.20	4320	19.0			38-2	F361238				
	1.26	4540	20.0			40-2	F361240	30-4	F361430	20-8	F361820
	1.32	4770	21.0			42-2	F361242				
	1.35	4850	21.3					32-4	F361432		
	1.39	5000	22.0			44-2	F361244			22-8	F361822
	1.43	5150	22.7					34-4	F361434		
	1.51	5450	24.0					36-4	F361436	24-8	F361824
	1.60	5750	25.3					38-4	F361438		
	1.64	5910	26.0							26-8	F361826
	1.68	6060	26.7					40-4	F361440		
	1.77	6360	28.0					42-4	F361442	28-8	F361828
	1.85	6660	29.3					44-4	F361444		
	1.89	6810	30.0							30-8	F361830
	2.02	7270	32.0							32-8	F361832
	2.15	7720	34.0							34-8	F361834
	2.27	8180	36.0							36-8	F361836
	2.40	8630	38.0							38-8	F361838
	2.52	9080	40.0							40-8	F361840
	2.65	9540	42.0							42-8	F361842
	2.78	9990	44.0							44-8	F361844

Accuracy: ±5% of controlled flow rate.

Stainless Steel Cartridges

50mm (2”) Stainless Steel Cartridges for DN40 to DN80 Valves

50mm · 2” · stainless steel cartridge										
Nominal flow rate	Pressure range, ΔP:			10-95 kPaD 1-14 psid		22-210 kPaD 2-32 psid		40-390 kPaD 4-57 psid		90-880 kPaD 8-128 psid	
				Type 1		Type 2		Type 4		Type 8	
	l/sec	l/hr	GPM	Marking	FlowCon	Marking	FlowCon	Marking	FlowCon	Marking	FlowCon
	0.757	2730	12.0	36-1	F3C2136						
	0.883	3180	14.0	42-1	F3C2142						
	1.01	3630	16.0	48-1	F3C2148						
	1.14	4090	18.0	54-1	F3C2154	36-2	F3C2236				
	1.26	4540	20.0	60-1	F3C2160						
	1.32	4770	21.0			42-2	F3C2242				
	1.39	5000	22.0	66-1	F3C2166						
	1.51	5450	24.0	72-1	F3C2172	48-2	F3C2248	36-4	F3C2436		
	1.64	5910	26.0	78-1	F3C2178						
	1.70	6130	27.0			54-2	F3C2254				
	1.77	6360	28.0	84-1	F3C2184			42-4	F3C2442		
	1.89	6810	30.0	90-1	F3C2190	60-2	F3C2260				
	2.02	7270	32.0	96-1	F3C2196			48-4	F3C2448		
	2.08	7490	33.0			66-2	F3C2266				
	2.15	7720	34.0	102-1	F3C21102						
	2.27	8180	36.0	108-1	F3C21108	72-2	F3C2272	54-4	F3C2454	36-8	F3C2836
	2.40	8630	38.0	114-1	F3C21114						
	2.46	8860	39.0			78-2	F3C2278				
	2.52	9080	40.0					60-4	F3C2460		
	2.65	9540	42.0			84-2	F3C2284			42-8	F3C2842
	2.78	9990	44.0					66-4	F3C2466		
	2.84	10200	45.0			90-2	F3C2290				
	3.03	10900	48.0			96-2	F3C2296	72-4	F3C2472	48-8	F3C2848
	3.22	11600	51.0			102-2	F3C22102				
	3.28	11800	52.0					78-4	F3C2478		
	3.41	12300	54.0			108-2	F3C22108			54-8	F3C2854
	3.53	12700	56.0					84-4	F3C2484		
	3.60	12900	57.0			114-2	F3C22114				
	3.79	13600	60.0					90-4	F3C2490	60-8	F3C2860
	4.04	14500	64.0					96-4	F3C2496		
	4.16	15000	66.0							66-8	F3C2866
	4.29	15400	68.0					102-4	F3C24102		
	4.54	16400	72.0					108-4	F3C24108	72-8	F3C2872
	4.79	17300	76.0					114-4	F3C24114		
	4.92	17700	78.0							78-8	F3C2878
	5.30	19100	84.0							84-8	F3C2884
	5.68	20400	90.0							90-8	F3C2890
	6.06	21800	96.0							96-8	F3C2896
	6.44	23200	102							102-8	F3C28102
	6.81	24500	108							108-8	F3C28108
	7.19	25900	114							114-8	F3C28114

Accuracy: ±5% of controlled flow rate.

Stainless Steel Cartridges

80mm (3”) Stainless Steel Cartridges for DN50-DN800 Valves

80mm · 3” · stainless steel cartridge										
Nominal flow rate	Pressure range, ΔP:		10-135 kPaD 1-20 psid		22-210 kPaD 2-32 psid		40-390 kPaD 4-57 psid		90-880 kPaD 8-128 psid	
			Type 1		Type 2		Type 4		Type 8	
l/sec	l/hr	GPM	Marking	FlowCon	Marking	FlowCon	Marking	FlowCon	Marking	FlowCon
0.883	3180	14.0	35-1	F324135						
1.01	3630	16.0	40-1	F324140						
1.10	3970	17.5			35-2	F324235				
1.14	4090	18.0	45-1	F324145						
1.26	4540	20.0	50-1	F324150	40-2	F324240				
1.39	5000	22.0	55-1	F324155						
1.42	5110	22.5			45-2	F324245				
1.47	5300	23.3					35-4	F324435		
1.51	5450	24.0	60-1	F324160						
1.58	5680	25.0			50-2	F324250				
1.64	5910	26.0	65-1	F324165						
1.68	6060	26.7					40-4	F324440		
1.73	6250	27.5			55-2	F324255				
1.77	6360	28.0	70-1	F324170						
1.89	6810	30.0	75-1	F324175	60-2	F324260	45-4	F324445		
2.02	7270	32.0	80-1	F324180						
2.05	7380	32.5			65-2	F324265				
2.10	7570	33.3					50-4	F324450		
2.15	7720	34.0	85-1	F324185						
2.21	7950	35.0			70-2	F324270			35-8	F324835
2.27	8180	36.0	90-1	F324190						
2.31	8330	36.7					55-4	F324455		
2.37	8520	37.5			75-2	F324275				
2.40	8630	38.0	95-1	F324195						
2.52	9080	40.0	100-1	F3241100	80-2	F324280	60-4	F324460	40-8	F324840
2.65	9540	42.0	105-1	F3241105						
2.68	9650	42.5			85-2	F324285				
2.73	9840	43.3					65-4	F324465		
2.78	9990	44.0	110-1	F3241110						
2.84	10200	45.0			90-2	F324290			45-8	F324845
2.90	10400	46.0	115-1	F3241115						
2.94	10600	46.7					70-4	F324470		
3.00	10800	47.5			95-2	F324295				
3.03	10900	48.0	120-1	F3241120						
3.15	11400	50.0	125-1	F3241125	100-2	F3242100	75-4	F324475	50-8	F324850
3.28	11800	52.0	130-1	F3241130						
3.31	11900	52.5			105-2	F3242105				
3.36	12100	53.3					80-4	F324480		
3.41	12300	54.0	135-1	F3241135						
3.47	12500	55.0			110-2	F3242110			55-8	F324855
3.53	12700	56.0	140-1	F3241140						
3.58	12900	56.7					85-4	F324485		
3.63	13100	57.5			115-2	F3242115				
3.66	13200	58.0	145-1	F3241145						
3.79	13600	60.0	150-1	F3241150	120-2	F3242120	90-4	F324490	60-8	F324860
3.94	14200	62.5			125-2	F3242125				
4.00	14400	63.3					95-4	F324495		
4.10	14800	65.0			130-2	F3242130			65-8	F324865
4.21	15100	66.7					100-4	F3244100		
4.26	15300	67.5			135-2	F3242135				
4.42	15900	70.0			140-2	F3242140	105-4	F3244105	70-8	F324870
4.57	16500	72.5			145-2	F3242145				
4.63	16700	73.3					110-4	F3244110		
4.73	17000	75.0			150-2	F3242150			75-8	F324875
4.84	17400	76.7					115-4	F3244115		
5.05	18200	80.0					120-4	F3244120	80-8	F324880
5.26	18900	83.3					125-4	F3244125		
5.36	19300	85.0							85-8	F324885
5.47	19700	86.7					130-4	F3244130		
5.68	20400	90.0					135-4	F3244135	90-8	F324890
5.89	21200	93.3					140-4	F3244140		
5.99	21600	95.0							95-8	F324895
6.10	22000	96.7					145-4	F3244145		
6.31	22700	100					150-4	F3244150	100-8	F3248100
6.62	23800	105							105-8	F3248105
6.94	25000	110							110-8	F3248110
7.26	26100	115							115-8	F3248115
7.57	27300	120							120-8	F3248120
7.89	28400	125							125-8	F3248125
8.20	29500	130							130-8	F3248130
8.52	30700	135							135-8	F3248135
8.83	31800	140							140-8	F3248140
9.15	32900	145							145-8	F3248145
9.46	34100	150							150-8	F3248150

Accuracy: ±5% of controlled flow rate.

Stainless Steel Cartridges

80mm (3”) Hi-capacity Stainless Steel Cartridges for DN50-DN800 Valves

80mm · 3” · hi-capacity stainless steel cartridge							
Nominal flow rate	Pressure range, ΔP:			28-135 kPaD 4-20 psid		55-210 kPaD 8-32 psid	
				Type 1		Type 2	
	l/sec	l/hr	GPM	Marking	FlowCon	Marking	FlowCon
	5.68	20400	90.0	220-1	F3241220		
	6.94	25000	110	270-1	F3241270	220-2	F3242220
	8.20	29500	130	320-1	F3241320		
	8.52	30700	135			270-2	F3242270
	10.1	36300	160			320-2	F3242320

Accuracy: ±5% of controlled flow rate.

80mm (3”) Hi-flow Stainless Steel Cartridges for DN150-DN800 Valves

80mm · 3” · hi-flow stainless steel cartridge							
Nominal flow rate	Pressure range, ΔP:			20-125 kPaD 3-18 psid		35-220 kPaD 5-32 psid	
				Type 3		Type 5	
	l/sec	l/hr	GPM	Marking	FlowCon	Marking	FlowCon
	6.31	22700	100	100-3	F117100		
	8.52	30700	135			135-5	F118135
	10.1	36300	160			160-5	F118160
	12.6	45400	200			200-5	F118200

Accuracy: ±5% of controlled flow rate.

For latest updates please see ***www.flowcon.com***

FlowCon international

www.flowcon.com

D E N M A R K D U B A I U S A B R A S I L S I N G A P O R E

FlowCon E-JUST 20mm-50mm

External Adjustable Composite Cartridge

SPECIFICATIONS

Static pressure:	2500 kPa / 360 psi
Temperature rating, media:	-20°C to +120°C / -4°F to +248°F
Materials:	
- Cartridge:	PSU (Polysulfone)
- Diaphragm:	- Hydrogenated acrylonitrile-butadiene-rubber on G-red, G-green, G-black, 40mm Y-green and 50mm G-black - EPDM on Y-red, Y-green and Y-black
- Spring:	18-8 stainless steel
- Stem seals:	EPDM
- Head nut:	Forged brass ASTM CuZn40Pb2
Flow rate range:	0.0278-4.48 l/sec

FLOW RATES (±5% of controlled flow or ±2% of maximum flow)

E-JUST model	Control range		Minimum setting			Maximum setting		
	kPaD	psid	l/sec	l/hr	GPM	l/sec	l/hr	GPM
20mm	17-200	2.5-29	0.0767	276	1.22	0.229	825	3.60
	17-210	2.5-30	0.0278	100	0.44	0.169	609	2.68
	30-400	4.4-58	0.113	406	1.79	0.352	1270	5.57
	35-400	5.1-58	0.0383	138	0.607	0.249	896	3.95
40mm	17-400	2.5-58	0.149	535	2.36	1.62	5830	25.7
50mm	20-400	2.9-58	0.883	3180	14.0	4.48	16100	70.9

MODEL NUMBER SELECTION

E-JUST _____ . _____ . _____

Insert cartridge size:
1=20mm (fits in 15-25mm valve bodies)
2=40mm (fits in 25-40mm valve bodies)
3=50mm (fits in 40-50mm valve bodies)

Insert dP control range:
Y= White pawl:
17-200 kPaD for 20mm red cartridge
17-210 kPaD for 20mm black or green cartridge
17-400 kPaD for 40mm cartridge
G=Grey pawl:
20-400 kPaD for 50mm cartridge
30-400 kPaD for 20mm red cartridge
35-400 kPaD for 20mm black or green cartridge

Insert color code:
R=red B=black (B=standard code for 50mm) G=green (G=standard code for 40mm)

Example: E-JUST1.Y.B=20mm black E-JUST cartridge for 15-25mm valve body, 17-210 kPaD.

FLOW RATE SETTING - E-JUST CARTRIDGE - FOR VALVES DN15-DN25 SMALL

20mm · 3/4" · E-JUST · Y-type · White pawl					
Pressure range, ΔP: 17-210 kPaD · 2.5-30 psid					
			Model no.	E-JUST1.Y.B	E-JUST1.Y.G
				Black	Green
	l/sec	l/hr	GPM	Setting	Setting
Nominal flow rate	0.0278	100	0.440	1.0	
	0.0299	108	0.475	1.1	
	0.0321	116	0.509	1.2	
	0.0343	123	0.543	1.3	
	0.0364	131	0.578	1.4	
	0.0386	139	0.612	1.5	
	0.0408	147	0.646	1.6	
	0.0429	155	0.681	1.7	
	0.0436	157	0.691		1.0
	0.0451	162	0.715	1.8	
	0.0468	168	0.741		1.1
	0.0473	170	0.749	1.9	
	0.0494	178	0.784	2.0	
	0.0499	180	0.791		1.2
	0.0516	186	0.818	2.1	
	0.0530	191	0.841		1.3
	0.0538	194	0.852	2.2	
	0.0559	201	0.887	2.3	
	0.0562	202	0.890		1.4
	0.0581	209	0.921	2.4	
	0.0593	214	0.940		1.5
	0.0603	217	0.955	2.5	
	0.0624	225	0.990	2.6	1.6
	0.0646	233	1.02	2.7	
	0.0656	236	1.04		1.7
	0.0668	240	1.06	2.8	
	0.0687	247	1.09		1.8
	0.0689	248	1.09	2.9	
	0.0711	256	1.13	3.0	
	0.0719	259	1.14		1.9
	0.0733	264	1.16	3.1	
	0.0750	270	1.19		2.0
	0.0754	272	1.20	3.2	
	0.0776	279	1.23	3.3	
	0.0781	281	1.24		2.1
	0.0798	287	1.26	3.4	
	0.0813	293	1.29		2.2
	0.0819	295	1.30	3.5	
	0.0841	303	1.33	3.6	
	0.0844	304	1.34		2.3
	0.0863	311	1.37	3.7	
	0.0876	315	1.39		2.4
	0.0884	318	1.40	3.8	

Continue next column...

20mm · 3/4" · E-JUST · Y-type · White pawl					
Pressure range, ΔP: 17-210 kPaD · 2.5-30 psid					
			Model no.	E-JUST1.Y.B	E-JUST1.Y.G
				Black	Green
	l/sec	l/hr	GPM	Setting	Setting
Nominal flow rate	0.0906	326	1.44	3.9	
	0.0907	327	1.44		2.5
	0.0928	334	1.47	4.0	
	0.0938	338	1.49		2.6
	0.0949	342	1.50	4.1	
	0.0970	349	1.54		2.7
	0.0971	350	1.54	4.2	
	0.0993	357	1.57	4.3	
	0.100	360	1.59		2.8
	0.101	365	1.61	4.4	
	0.103	372	1.64		2.9
	0.104	373	1.64	4.5	
	0.106	381	1.68	4.6	
	0.106	383	1.69		3.0
	0.108	389	1.71	4.7	
	0.110	394	1.74		3.1
	0.110	396	1.75	4.8	
	0.112	404	1.78	4.9	
	0.113	406	1.79		3.2
	0.114	412	1.81	5.0	
	0.116	417	1.84		3.3
	0.119	428	1.89		3.4
	0.122	440	1.94		3.5
	0.125	451	1.98		3.6
	0.128	462	2.03		3.7
	0.132	473	2.08		3.8
	0.135	485	2.13		3.9
	0.138	496	2.18		4.0
	0.141	507	2.23		4.1
	0.144	519	2.28		4.2
	0.147	530	2.33		4.3
	0.150	541	2.38		4.4
	0.153	553	2.43		4.5
	0.157	564	2.48		4.6
	0.160	575	2.53		4.7
	0.163	586	2.58		4.8
	0.166	598	2.63		4.9
	0.169	609	2.68		5.0

Accuracy: Greatest of
either ±5% of controlled flow rate
or ±2% of maximum flow rate

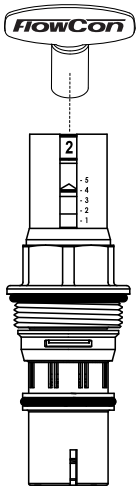

Use the FlowCon adjustment key (part number ACC0001) for adjusting the flow rate.

A setting of 4.2 corresponds to a flow rate of 0.144 l/sec for the 20mm green cartridge, range 17-210 kPaD.

FLOW RATE SETTING - E-JUST CARTRIDGE - FOR VALVES DN15-DN25 SMALL (continued)

20mm · 3/4" · E-JUST · Y-type · White pawl			
Pressure range. ΔP: 17-200 kPaD · 2.5-29 psid			
			Model no. E-JUST1.Y.R
			Red
Nominal flow rate l/sec	l/hr	GPM	Setting
0.0767	276	1.22	1.0
0.0813	293	1.29	1.1
0.0860	310	1.36	1.2
0.0907	326	1.44	1.3
0.0953	343	1.51	1.4
0.100	360	1.58	1.5
0.105	377	1.66	1.6
0.109	393	1.73	1.7
0.114	410	1.80	1.8
0.118	426	1.88	1.9
0.123	443	1.95	2.0
0.128	459	2.02	2.1
0.132	475	2.09	2.2
0.136	491	2.16	2.3
0.141	507	2.23	2.4
0.145	523	2.30	2.5
0.150	539	2.37	2.6
0.154	554	2.44	2.7
0.158	569	2.51	2.8
0.162	584	2.57	2.9
0.166	599	2.64	3.0
0.170	614	2.70	3.1
0.174	628	2.76	3.2
0.178	642	2.83	3.3
0.182	655	2.89	3.4
0.186	669	2.94	3.5
0.189	682	3.00	3.6
0.193	695	3.06	3.7
0.196	707	3.11	3.8
0.200	719	3.17	3.9
0.203	731	3.22	4.0
0.206	742	3.27	4.1
0.209	753	3.32	4.2
0.212	764	3.36	4.3
0.215	774	3.41	4.4
0.218	784	3.45	4.5
0.220	793	3.49	4.6
0.223	802	3.53	4.7
0.225	810	3.57	4.8
0.227	818	3.60	4.9
0.229	825	3.60	5.0

Accuracy: Greatest of
either ±5% of controlled flow rate
or ±2% of maximum flow rate

20mm · 3/4" · E-JUST · G-type · Grey pawl			
Pressure range. ΔP: 30-400 kPaD · 4.4-58 psid			
			Model no. E-JUST1.G.R
			Red
Nominal flow rate l/sec	l/hr	GPM	Setting
0.113	406	1.79	1.0
0.119	427	1.88	1.1
0.125	449	1.98	1.2
0.131	470	2.07	1.3
0.137	492	2.17	1.4
0.143	513	2.26	1.5
0.149	535	2.36	1.6
0.155	556	2.45	1.7
0.161	578	2.54	1.8
0.167	599	2.64	1.9
0.172	621	2.73	2.0
0.178	642	2.83	2.1
0.184	664	2.92	2.2
0.190	685	3.02	2.3
0.196	707	3.11	2.4
0.202	728	3.21	2.5
0.208	750	3.30	2.6
0.214	771	3.40	2.7
0.220	793	3.49	2.8
0.226	814	3.59	2.9
0.232	836	3.68	3.0
0.238	857	3.78	3.1
0.244	879	3.87	3.2
0.250	900	3.96	3.3
0.256	922	4.06	3.4
0.262	943	4.15	3.5
0.268	965	4.25	3.6
0.274	987	4.34	3.7
0.280	1010	4.44	3.8
0.286	1030	4.53	3.9
0.292	1050	4.63	4.0
0.298	1070	4.72	4.1
0.304	1090	4.82	4.2
0.310	1120	4.91	4.3
0.316	1140	5.01	4.4
0.322	1160	5.10	4.5
0.328	1180	5.20	4.6
0.334	1200	5.29	4.7
0.340	1220	5.38	4.8
0.346	1240	5.48	4.9
0.352	1270	5.57	5.0

Accuracy: Greatest of
either ±5% of controlled flow rate
or ±2% of maximum flow rate

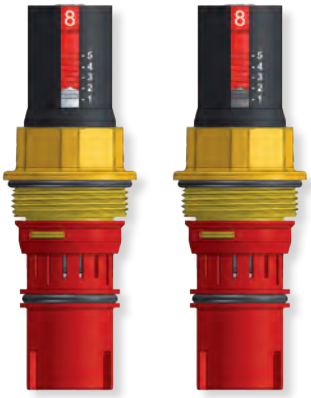

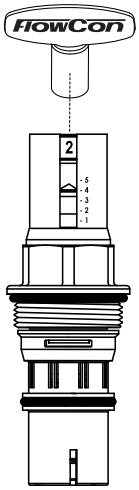

Use the FlowCon adjustment key (part number ACC0001) for adjusting the flow rate.

A setting of 4.2 corresponds to a flow rate of 0.304 l/sec for the 20mm red cartridge, range 30-400 kPaD.

FLOW RATE SETTING - E-JUST CARTRIDGE - FOR VALVES DN15-DN25 SMALL (continued)

20mm · 3/4" · E-JUST · G-type · Grey pawl					
Pressure range, ΔP: 35-400 kPaD · 5.1-58 psid					
			Model no.	E-JUST1.G.B	E-JUST1.G.G
				Black	Green
	l/sec	l/hr	GPM	Setting	Setting
Nominal flow rate	0.0383	138	0.607	1.0	
	0.0416	150	0.660	1.1	
	0.0449	162	0.712	1.2	
	0.0483	174	0.765	1.3	
	0.0516	186	0.817	1.4	
	0.0549	198	0.870	1.5	
	0.0582	210	0.922	1.6	
	0.0615	221	0.975	1.7	
	0.0648	233	1.03	1.8	
	0.0660	238	1.05		1.0
	0.0681	245	1.08	1.9	
	0.0706	254	1.12		1.1
	0.0714	257	1.13	2.0	
	0.0748	269	1.18	2.1	
	0.0751	271	1.19		1.2
	0.0781	281	1.24	2.2	
	0.0797	287	1.26		1.3
	0.0814	293	1.29	2.3	
	0.0843	304	1.34		1.4
	0.0847	305	1.34	2.4	
	0.0880	317	1.40	2.5	
	0.0889	320	1.41		1.5
	0.0913	329	1.45	2.6	
	0.0934	336	1.48		1.6
	0.0946	341	1.50	2.7	
	0.0979	353	1.55	2.8	
	0.0980	353	1.55		1.7
	0.101	365	1.61	2.9	
	0.103	369	1.63		1.8
	0.105	377	1.66	3.0	
	0.107	386	1.70		1.9
	0.108	388	1.71	3.1	
	0.111	400	1.76	3.2	
	0.112	402	1.77		2.0
	0.115	412	1.82	3.3	
	0.116	419	1.84		2.1
	0.118	424	1.87	3.4	
	0.121	435	1.92		2.2
	0.121	436	1.92	3.5	
	0.124	448	1.97	3.6	
	0.125	452	1.99		2.3
	0.128	460	2.03	3.7	
	0.130	468	2.06		2.4
	0.131	472	2.08	3.8	

Continue next column...

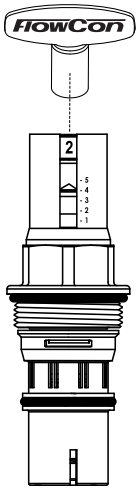

Use the FlowCon adjustment key (part number ACC0001) for adjusting the flow rate.

A setting of 4.2 corresponds to a flow rate of 0.212 l/sec for the 20mm green cartridge, range 35-400 kPaD.

20mm · 3/4" · E-JUST · G-type · Grey pawl					
Pressure range, ΔP: 35-400 kPaD · 5.1-58 psid					
			Model no.	E-JUST1.G.B	E-JUST1.G.G
				Black	Green
	l/sec	l/hr	GPM	Setting	Setting
Nominal flow rate	0.134	484	2.13	3.9	
	0.135	485	2.13		2.5
	0.138	496	2.18	4.0	
	0.139	501	2.21		2.6
	0.141	508	2.24	4.1	
	0.144	517	2.28		2.7
	0.144	520	2.29	4.2	
	0.148	532	2.34	4.3	
	0.148	534	2.35		2.8
	0.151	544	2.39	4.4	
	0.153	550	2.42		2.9
	0.154	556	2.45	4.5	
	0.157	567	2.50		3.0
	0.158	567	2.50	4.6	
	0.161	579	2.55	4.7	
	0.162	583	2.57		3.1
	0.164	591	2.60	4.8	
	0.167	600	2.64		3.2
	0.168	603	2.66	4.9	
	0.171	615	2.71	5.0	
	0.171	616	2.71		3.3
	0.176	633	2.79		3.4
	0.180	649	2.86		3.5
	0.185	666	2.93		3.6
	0.189	682	3.00		3.7
	0.194	699	3.08		3.8
	0.199	715	3.15		3.9
	0.203	731	3.22		4.0
	0.208	748	3.29		4.1
	0.212	764	3.37		4.2
	0.217	781	3.44		4.3
	0.221	797	3.51		4.4
	0.226	814	3.58		4.5
	0.231	830	3.66		4.6
	0.235	847	3.73		4.7
	0.240	863	3.80		4.8
	0.244	880	3.87		4.9
	0.249	896	3.95		5.0

Accuracy: Greatest of
either ±5% of controlled flow rate
or ±2% of maximum flow rate

FLOW RATE SETTING - E-JUST CARTRIDGE - FOR VALVES DN25 LARGE-DN40

40mm · 1 1/2" · E-JUST · Y-type · White pawl				
Pressure range. ΔP: 17-400 kPaD · 2.5-58 psid				
			Model no.	E-JUST2.Y.G
Nominal flow rate	l/sec	l/hr	GPM	Setting
	0.149	535	2.36	1.0
	0.220	793	3.49	1.1
	0.289	1040	4.58	1.2
	0.355	1280	5.63	1.3
	0.418	1510	6.63	1.4
	0.479	1730	7.60	1.5
	0.538	1940	8.52	1.6
	0.594	2140	9.41	1.7
	0.647	2330	10.3	1.8
	0.699	2520	11.1	1.9
	0.748	2690	11.9	2.0
	0.795	2860	12.6	2.1
	0.841	3030	13.3	2.2
	0.884	3180	14.0	2.3
	0.925	3330	14.7	2.4
	0.965	3470	15.3	2.5
	1.00	3610	15.9	2.6
	1.04	3740	16.5	2.7
	1.07	3870	17.0	2.8
	1.11	3990	17.6	2.9
	1.14	4100	18.1	3.0
	1.17	4220	18.6	3.1
	1.20	4320	19.0	3.2
	1.23	4420	19.5	3.3
	1.26	4520	19.9	3.4
	1.28	4620	20.3	3.5
	1.31	4710	20.7	3.6
	1.33	4800	21.1	3.7
	1.36	4890	21.5	3.8
	1.38	4970	21.9	3.9
	1.40	5050	22.3	4.0
	1.43	5130	22.6	4.1
	1.45	5210	23.0	4.2
	1.47	5290	23.3	4.3
	1.49	5370	23.6	4.4
	1.51	5440	24.0	4.5
	1.53	5520	24.3	4.6
	1.55	5600	24.6	4.7
	1.58	5670	25.0	4.8
	1.60	5750	25.3	4.9
	1.62	5830	25.7	5.0

Accuracy: Greatest of
either ±5% of controlled flow rate
or ±2% of maximum flow rate

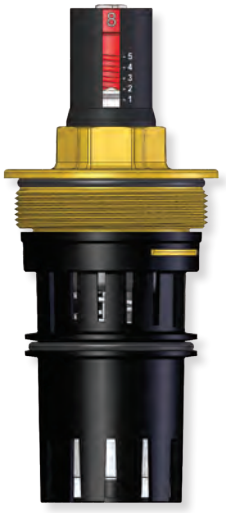

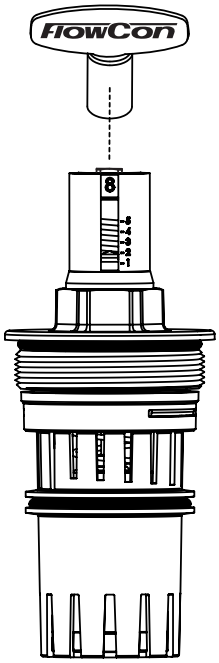

Use the FlowCon adjustment key (part number ACC0001) for adjusting the flow rate.

A setting of 4.2 corresponds to a flow rate of 1.45 l/sec for the 40mm cartridge, range 17-400 kPaD.

FLOW RATE SETTING - E-JUST CARTRIDGE - FOR VALVES DN40/50

50mm · 2” · E-JUST · G-type · Grey pawl				
Pressure range. ΔP: 20-400 kPaD · 2.9-58 psid				
			Model no.	E-JUST3.G.B
Nominal flow rate	l/sec	l/hr	GPM	Setting
	0.883	3180	14.0	1.0
	1.14	4100	18.0	1.1
	1.37	4940	21.7	1.2
	1.59	5710	25.1	1.3
	1.78	6420	28.3	1.4
	1.96	7070	31.1	1.5
	2.13	7660	33.7	1.6
	2.28	8200	36.1	1.7
	2.42	8700	38.3	1.8
	2.54	9150	40.3	1.9
	2.66	9570	42.1	2.0
	2.77	9960	43.8	2.1
	2.86	10300	45.4	2.2
	2.95	10600	46.8	2.3
	3.04	10900	48.2	2.4
	3.12	11200	49.4	2.5
	3.19	11500	50.6	2.6
	3.26	11700	51.7	2.7
	3.32	12000	52.7	2.8
	3.39	12200	53.7	2.9
	3.45	12400	54.6	3.0
	3.51	12600	55.6	3.1
	3.56	12800	56.5	3.2
	3.62	13000	57.3	3.3
	3.67	13200	58.2	3.4
	3.73	13400	59.1	3.5
	3.78	13600	59.9	3.6
	3.83	13800	60.8	3.7
	3.89	14000	61.6	3.8
	3.94	14200	62.4	3.9
	3.99	14400	63.3	4.0
	4.05	14600	64.1	4.1
	4.10	14800	65.0	4.2
	4.15	14900	65.8	4.3
	4.20	15100	66.6	4.4
	4.25	15300	67.4	4.5
	4.30	15500	68.2	4.6
	4.35	15700	68.9	4.7
	4.39	15800	69.6	4.8
	4.44	16000	70.3	4.9
	4.48	16100	70.9	5.0

Accuracy: Greatest of
either ±5% of controlled flow rate
or ±2% of maximum flow rate

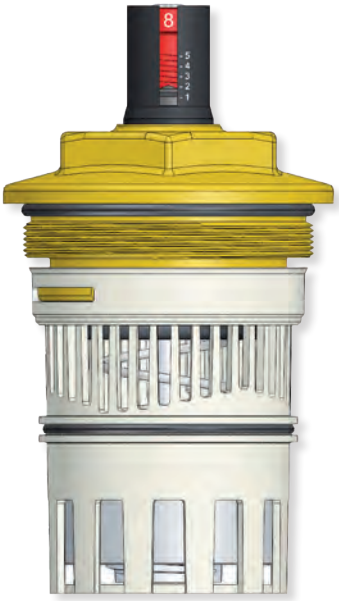

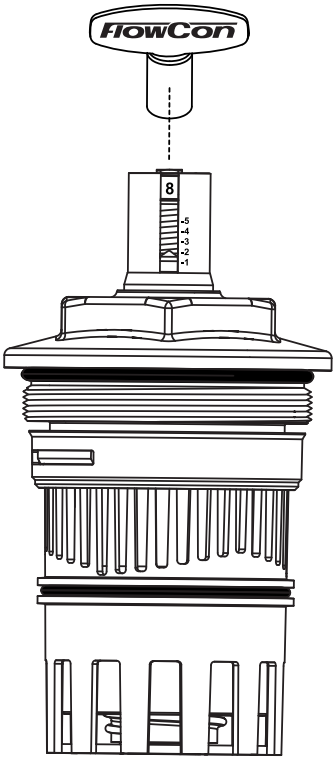

Use the FlowCon adjustment key (part number ACC0001) for adjusting the flow rate.

A setting of 4.2 corresponds to a flow rate of 4.10 l/sec for the 50mm cartridge, range 20-400 kPaD.

GENERAL DESCRIPTION

The FlowCon E-JUST cartridge is tamper-proof since the adjustment unit is being operated by means of a special FlowCon key and the setting can be sealed by means of a colored top cover. The color of the cover indicates the color of the cartridge, i.e. the flow range. The color of the pawl on the handle shows the control range. The FlowCon E-JUST can be used with the following FlowCon valves:

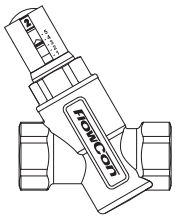

FlowCon A
(E-JUST1.x.x)

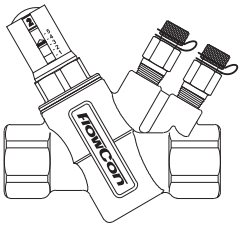

FlowCon AB
(E-JUST1.xx / E-JUST2.Y.B / E-JUST3.G.B)

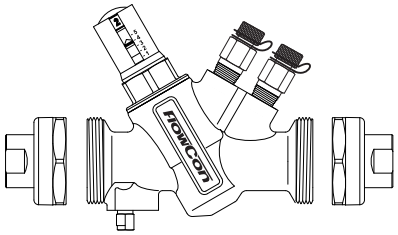

FlowCon ABV
(E-JUST1.x.x / E-JUST2.Y.B)

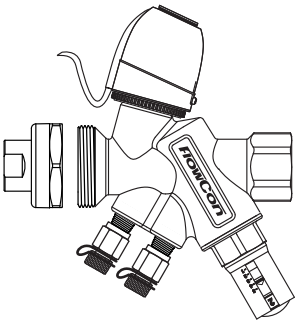

FlowCon EVC
(E-JUST1.x.x)

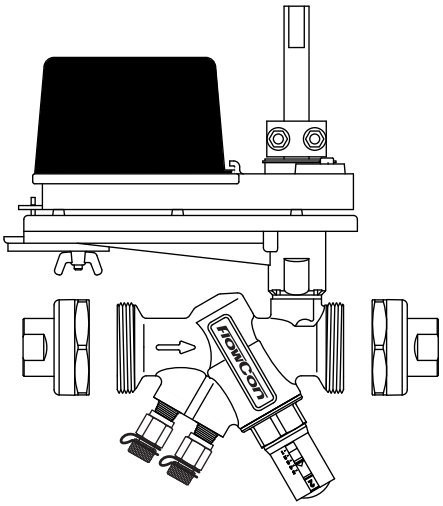

FlowCon ABM
(E-JUST1.x.x / E-JUST2.Y.B)

GENERAL SPECIFICATIONS

1. AUTOMATIC BALANCING VALVES WITH EXTERNAL ADJUSTABLE CARTRIDGE

1.1. Contractor shall install automatic balancing valves where indicated in drawings.
1.2. Valve shall consist of dynamic, adjustable flow limiting device.
1.3. Housing shall be configured for flow regulation unit accessibility.

2. FLOW REGULATOR / AUTOMATIC BALANCING UNIT

2.1. Flow regulation unit assembly shall be manufactured of polysulfone with a hydrogenated acrylonitrile-butadiene rubber or EPDM diaphragm and stainless steel 18-8 spring.
2.2. Flow regulation unit shall be readily accessible for change-out or maintenance.
2.3. Flow regulation unit shall be adjustable with the valve in-line and the system in operation.
2.4. Flow regulation unit shall be externally adjustable to 1 of 41 different flow rates; shall be available in 4 different kPaD operational ranges for DN15/20/25, 1 kPaD operational range for DN25/32/40 and 1 kPaD operational range for DN40/50; minimum range shall be capable of being activated by minimum 17 kPaD. Further, the flow regulation unit shall be capable of controlling flow within ±5% of rated flow or ±2% of maximum flow.
2.5. Identification tags shall be available for all cartridges; tags shall be indelibly marked with differential pressure range, flow rate, color and dial setting.

UPDATES

For latest updates please see www.flowcon.com

FlowCon International

FlowCon DPCV

Differential Pressure Control Valves

FlowCon DPCV

Differential Pressure Control Valves

The FlowCon DPCV is designed for controlling differential pressure in water based heating and air-conditioning systems, ensuring constant pressure drop over two specific points of the water system regardless of pressure and flow fluctuations.

The FlowCon DPCV will allow the user to set the valve to a pre-defined differential pressure value. To make the installation as easy as possible the setting is done by hand without any usage of tools. To make installation even easier, no special measuring equipment or conversion tables are required during adjustment, since the settings are printed directly on the handle. Once the installation process is completed, the valve allows a tamper-proof function, when the supplied lock ring is fastened with a cable binder. Further, the FlowCon DPCV can be used as a shut-off valve for maintenance purpose.

In heating systems the FlowCon DPCV is primarily intended to be used on the risers or branches with the aim of maintaining a constant differential pressure between the supply and return side. Consequently, for the sub system controlled by the FlowCon DPCV, water velocity through the radiator valves is reduced and potential noise at part loads is minimized.

In cooling systems the FlowCon DPCV is installed in order to absorb any pressure fluctuations introduced by system load changes and potentially VFD pumps, if installed. The absorption of pressure will lead to reduced flow fluctuations and thereby improved balancing and improved energy consumption of the building.

Features and Benefits

- **Rugged, robust design in bronze/brass**.
- **All functions located on one side** for easier access and use.
- **High flow rates**.
- **Wide pre-setting range** with stepless ΔP-scale and without any need of tools.
- **Lockable pre-setting**.
- **Capillary tube** with ¼" male ISO thread connection, fitting many valve types (including all FlowCon AB/ABV/ABM housings).
- **Available with up to 3 pressure/temperature plugs** for maximum measurement options - possibility of measuring the pressure at:
  · the capillary tube
  · the inlet of the DPCV
  · the outlet of the DPCV.
- Can be used as a **shut-off valve** during maintenance.

Principle of Operation

The FlowCon DPCV controls the differential pressure between the capillary tube and the inlet of the DPCV. The FlowCon DPCV regulates the differential pressure by means of a diaphragm element counteracted by a spring. The diaphragm element is connected to a cone, which movements change the size of the orifice until the controlled differential pressure is reached. When pre-setting the differential pressure, the spring is tightened or loosened so that the balance will be found at a higher or lower differential pressure than before. When the valve is used as a shut-off valve, the cone closes off the orifice.

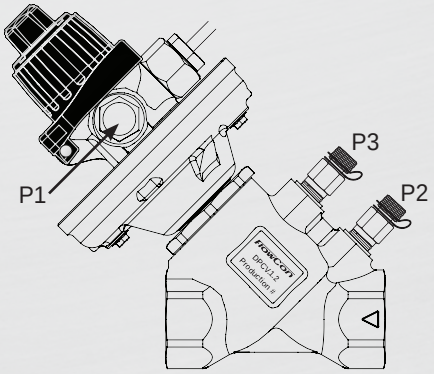

Pressure Verification

Optional pressure/temperature test plugs are available for verifying the differential pressure. They are fitted into 1/4'' ISO female threaded ports. With the pressure/temperature plugs fitted, a pressure differential reading across the FlowCon DPCV can be taken (P2÷P3). Using a combination of other pressure/-temperature plugs the controlled pressure differential across the riser or branch can be read (P1÷P2).

Differential Pressure Setting

For adjusting the differential pressure range of the FlowCon DPCV simply lift the lock-ring and turn the handle to the required setting without using additional tools. Settings can be read directly on the scale on the handle. As an example, a setting 10 corresponds to a ΔP of 10 kPaD (1.5 psid) equal for all FlowCon DPCV valve sizes (DN15-50). But each valve provides a wide stepless setting range between 5 and 35 kPaD (0.7-5.1 psid).

After setting ΔP the lock-ring is re-fitted and can optionally be locked with a cable binder securing the valve to be tamper-proof.

Shut-off Function

The built-in shut-off function is activated by turning with an Allen key counter-clockwise at top of the FlowCon DPCV handle until the end point. Opening the FlowCon DPCV again is done with a clockwise movement with the Allen key until end point. The ΔP setting is kept as per memory stop.

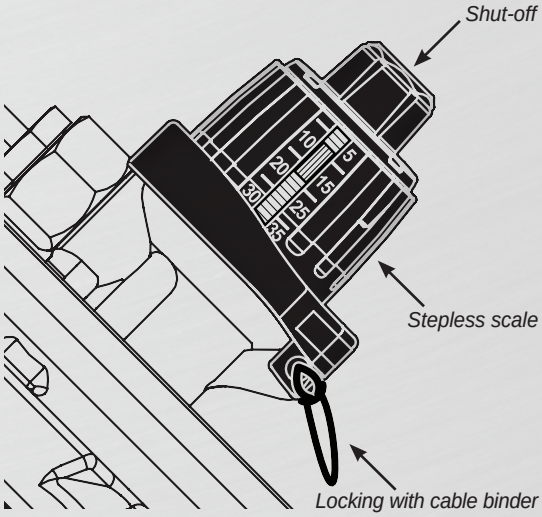

Technical Data

For further information please see FlowCon tech notes. For latest updates please see ***www.flowcon.com.***

Valve size			DPCV DN15	DPCV DN20	DPCV DN25	DPCV DN32	DPCV DN40	DPCV DN50
Static Pressure	(kPa)		1600					
	(psi)		232					
Temperature Rating (media)	(ºC)		+130					
	(ºF)		+266					
Pressure Drop Data			NOTE: For pump head calculations, add the minimum pressure differential for the index circuit to the other components pressure losses (i.e. valves, coil, etc.)					
Valve	Kv-value	(m^3/hr)	3.6	5.8	7.1	15.4	22.0	35.8
	Cv-value	(GPM)	4.2	6.7	8.2	17.9	25.5	41.5
Differential pressure range	(kPaD)		5-35					
	(psid)		0.7-5.1					
Flow Rate	(l/hr)		50-1700	70-2600	110-3000	150-6500	200-9000	500-13000
	(GPM)		0.22-7.48	0.31-11.5	0.48-13.2	0.66-28.6	0.88-39.6	2.20-57.2

FlowCon DPCV 15-50mm

Differential Pressure Control Valve

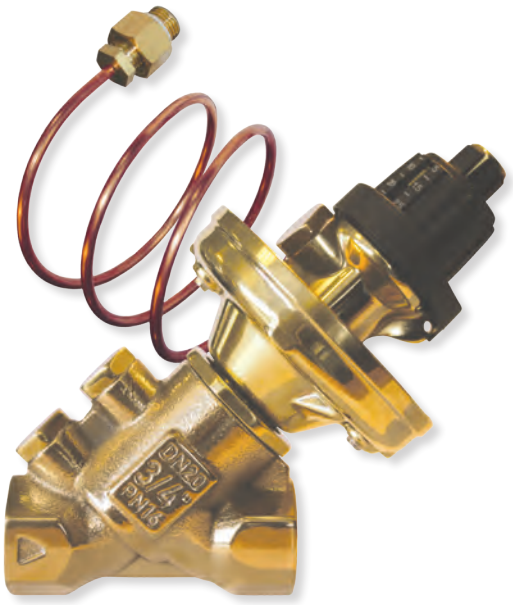

SPECIFICATIONS

Static pressure:	1600 kPa / 232 psi
Temperature rating, media:	-20ºC to +130ºC / -4ºF to +266ºF
Material:	
- Body:	Bronze CuSn5Zn5Pb2 / CuSn5Zn5Pb5-C and Brass CuZn39Pb3
- Internal parts:	Brass CuZn39Pb3 / Stainless steel
- O-rings:	EPDM
- Seat:	EPDM
- Diaphragm:	EPDM
- Capillary tube:	Cu
- Spring:	Stainless steel
- Plastic parts:	PA
- Fasteners:	Stainless steel / Carbon steel nickel plated
Maximum operational ΔP:	210 kPaD / 30 psid
Differential pressure range:	5 kPaD to 35 kPaD / 0.7 psid to 5.1 psid
End connections:	Fixed female ISO (ISO7, DIN2999)
Capillary tube:	Ø4mm, length: 0.8m, end connection: ¼" ISO thread

DIMENSIONS AND WEIGHTS (NOMINAL) (measured in mm unless noted)

Model no.	Valve size	L1	L2	H1	H2	W	Weight (kgs.)	Kvs
DPCV.1.1.X.I	15mm	75	140	28	112	87	1.5	3.6
DPCV.1.2.X.I	20mm	80	140	28	112	87	1.6	5.8
DPCV.1.3.X.I	25mm	90	143	28	115	87	1.8	7.1
DPCV.1.4.X.I	32mm	110	188	35	153	117	3.6	15.4
DPCV.1.5.X.I	40mm	120	194	36	158	117	4.0	22.0
DPCV.1.6.X.I	50mm	150	206	45	161	117	4.9	35.8

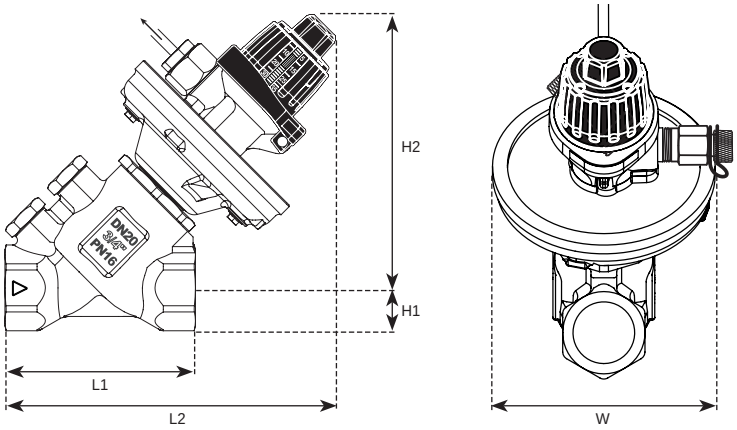

MODEL NUMBER SELECTION

DPCV . 1 . . I

Insert controlled differential pressure range:
1=5-35 kPaD / 0.7-5.1 psid (standard)

Insert body type:
1=15mm (1/2") 2=20mm (3/4") 3=25mm (1") 4=32mm (1 1/4") 5=40mm (1 1/2") 6=50mm (2")

Insert p/t plug requirements:
B=2 pressure/temperature plugs
C=3 pressure/temperature plugs[1]
P=taps plugged (standard)

Insert connections standard:
I=ISO (standard)

Example: DPCV.1.2.C.I=DPCV DN20 with 3 pressure/temperature plugs 20mm ISO female end connections, 5-35kPaD.

Note 1: the extra p/t plug can be used to measure the pressure in the capillary tube.

GENERAL DESCRIPTION

The FlowCon DPCV series are differential pressure control valves.
Each valve has an adjustable differential pressure setting to enable differential pressure limitation for balancing or avoiding noise from the sub system that the valve is controlling. Furthermore, the DPCV can be used as a shut-off valve.

The FlowCon DPCV is easy to adjust without special equipment or conversion tables since the setting is printed directly on the valve which is adjusted by hand. The valve is tamper-proof when the supplied lock ring is fastened with a cable binder.

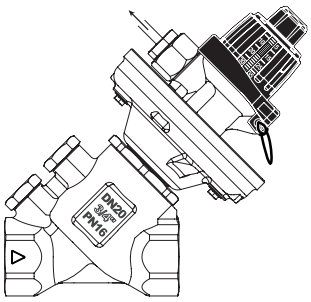

DIFFERENTIAL PRESSURE LIMITATION SETTINGS

General settings of ΔPcontrolled			Recommended operational ΔP			
Setting	kPaD	psid	min.		max.	
			kPaD	psid	kPaD	psid
5	5	0.7	25	3.6	30	4.4
10	10	1.5	30	4.4	60	8.7
15	15	2.2	35	5.1	90	13
20	20	2.9	40	5.8	120	17
25	25	3.6	45	6.5	150	22
30	30	4.4	50	7.3	180	26
35	35	5.1	55	8.0	210	30

Accuracy: Greatest of either ±25% of controlled differential pressure or ±10% of maximum differential pressure.

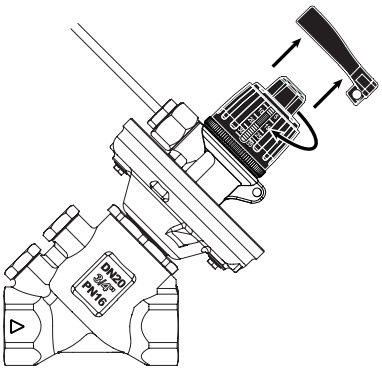

Turn the top wheel by hand until the setting is reached.

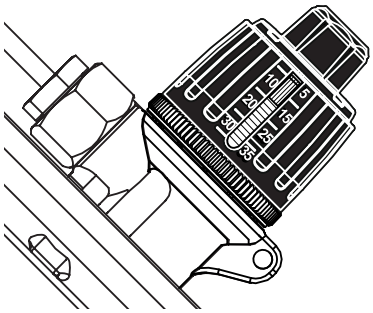

The picture shows a setting of 5 kPa (factory setting).

For a more precise setting or to reach a setting in between the settings in the table, please measure the controlled differential pressure while adjusting the setting.

MAXIMUM FLOW RATE LIMITATION SETTINGS

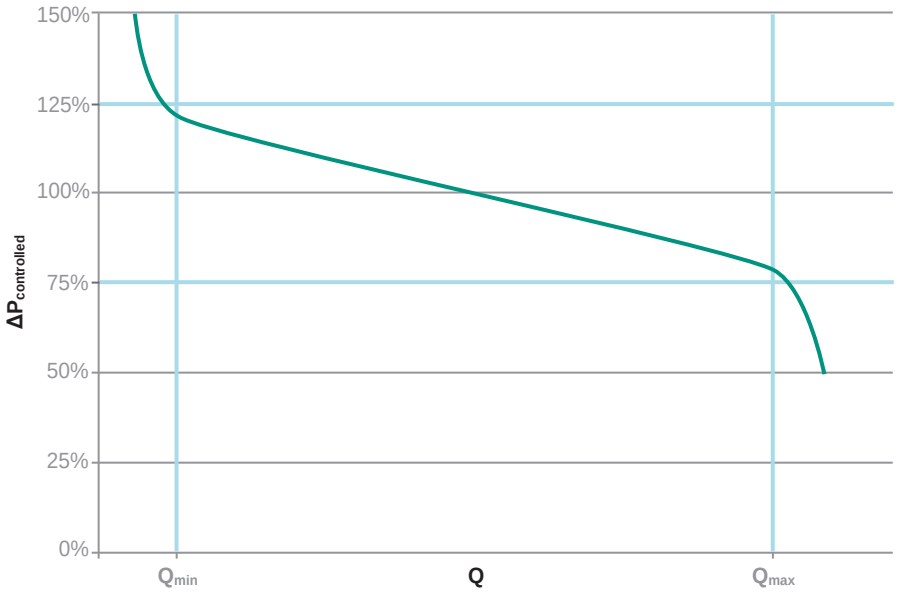

Flow range (l/h)								
Setting:		5	10	15	20	25	30	35
DN15	Qmin	50	60	70	80	90	105	120
	Qmax	1600	1600	1600	1600	1600	1650	1700
DN20	Qmin	70	80	90	105	120	135	150
	Qmax	2100	2150	2400	2450	2500	2550	2600
DN25	Qmin	110	120	130	145	160	185	200
	Qmax	2250	2400	2600	2850	2900	2950	3000
DN32	Qmin	150	150	150	150	150	150	150
	Qmax	3600	4200	4600	5000	5500	6000	6500
DN40	Qmin	200	200	200	200	200	200	200
	Qmax	6000	6600	7200	7900	8200	8600	9000
DN50	Qmin	500	500	500	500	500	500	500
	Qmax	6300	8000	10000	12000	12300	12600	13000

ACCESSORIES

- Capillary tube with fittings, spare part: ACC00120.

GENERAL SPECIFICATIONS

1. DIFFERENTIAL PRESSURE CONTROL VALVES

1.1. Contractor shall install the differential pressure control valves where indicated in drawings.
1.2. Valve shall be a differential pressure control device. Differential pressure control valve shall accurately control differential pressure over a sub system independent of system fluctuation.
1.3. Differential pressure shall be available in 1 range for DN15 to DN50. The differential pressure setting shall be continuously adjustable within the range 5-35 kPaD. Valve shall be externally adjustable while in-line and the system in operation.
1.4. The differential pressure control valve shall be capable of controlling the differential pressure within ±25% of controlled differential pressure or ±10% of the maximum setting.
1.5. Valve shall be able to function as a shut-off valve meanwhile it will not functioning as a differential pressure control valve.
1.6. Valve housing shall consist of bronze CuSn5Zn5Pb2 / CuSn5Zn5Pb5-C, rated at no less than 1600 kPa static pressure and +130°C.
1.7. Valve housing shall be permanently marked to show direction of flow.
1.8. Differential pressure regulation parts shall consist of brass, copper and stainless steel with EPDM diaphragm and sealing parts.
1.9. Optional pressure/temperature test plugs for verifying accuracy of differential pressure performance shall be available for all valve sizes.

APPLICATION AND SCHEMATIC EXAMPLE

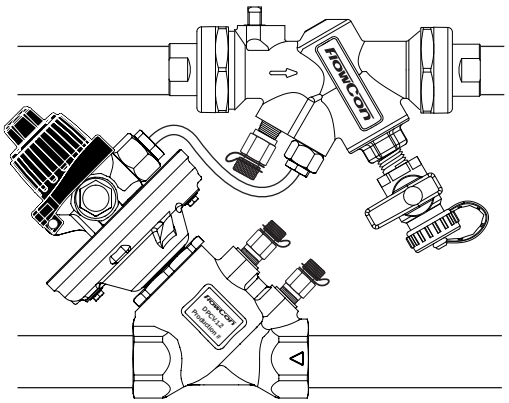

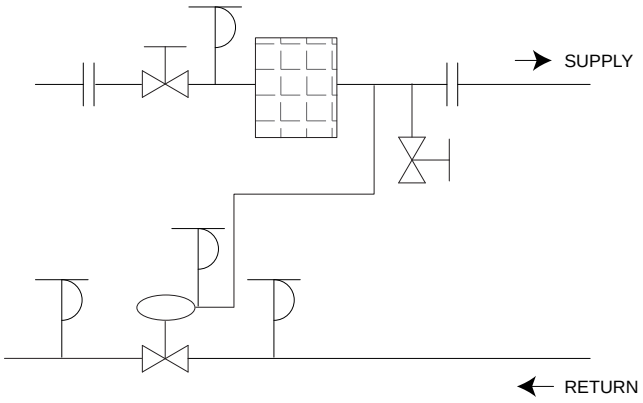

UPDATES

For latest updates please see www.flowcon.com

FlowCon T-JUST

Thermostatic Valve for Domestic Water

FlowCon T-JUST

Thermostatic Insert for Thermostatic Valves in Domestic Water

The FlowCon T-JUST is a thermostatic element insert which fits in a standard FlowCon valve body of your choice and is used as a thermostatic control valve designed to control the thermal balance in domestic hot water circulation installations.

The valve automatically controls the temperature of the water which circulates through the system and therefore a thermal balance is achieved throughout the entire system. Further, the proper temperature is immediate available at all draw-off taps to ensure optimal comfort.

The T-JUST insert can be adjusted to the required temperature within a scale of +35°C to +65°C. Also, it is equipped with a manual or actuated by-pass. The purpose of the by-pass is to increase the temperature of the water to maximum temperature for a certain period of time to avoid bacterial problems such as Legionella.

Legionnaire's disease is an infection which in 90% of the cases is caused by Legionella Pheumphila. Since the infection is transmitted when inhaling aerosolized, contaminated water into the lungs, the presence of bacteria in water systems creates a risk wherever there are aerosol-producing devices. The perfect conditions for transmission of infection exist in water tanks and water installations in dwelling buildings, commercial buildings and public buildings such as hotels, hospitals etc.

The normal recommended physical method of bacteria pasteurization is thermal disinfection, where the water is heated up to ''disinfection temperature'' and maintained for a specific ''disinfection time''. FlowCon T-JUST is designed and ready to perform a regular thermal disinfection at a temperature of up to +70°C to lower the risk of Legionella.

Features and Benefits

- **Thermal balancing**, the correct water temperature at each draw-off tap.
- **The thermostatic element and moving parts are located out of water contact**, this will prevent problems with scaling.
- **Field adjustable**, temperature setting can be changed on demand, from +35°C to +65°C.
- **By-passing possibility while the system is working**, either manual or automatic with ON/OFF actuator, normally closed.
- **Accuracy** of ±2°C.
- Each T-JUST is **calibrated separately**.
- Due to design the valve is **not susceptible to blockage**.
- **Product approval**, all valve bodies are available in DZR-brass and T-JUST is approved to meet the requirements in the Danish Building Regulations.
- **Pressure/temperature measurement plugs** available for verifying operating temperature.
- **Double union end connections** for ease of installation and wide selection of end fittings (ABV) or **fixed female threaded ends** (A/AB).

Applications

The T-JUST insert can be used with the following FlowCon valves:

- *FlowCon A (DN15/20/25)*
- *FlowCon AB (DN15/20/25)*
- *FlowCon ABV1 (DN15/20/25)*
- *FlowCon FF-unit (DN20)*

The FF-unit is designed to meet market requirements and directly replace other brands of thermostatic valves.

Principle of Operation

The T-JUST insert controls the temperature of the water which circulates through the system. The valve is in balance, when the water temperature has reached the temperature set on the T-JUST insert. If T-JUST is set to a temperature, of for instance +55°C, and the temperature of the circulating water is above +55°C, the thermostatic element expands and the internal cone moves towards the valve seat and the valve closes. If the temperature is below +55°C, the thermostatic element will contract and the valve will open, allowing more water to flow through.

Temperature Selection and Setting

To set the temperature simply remove the black cover and set the scale by means of a special FlowCon adjustment key to the desired temperature between +35°C and +65°C. Screw on the top cover tightly to allow the thermostatic control to be working and to avoid unwanted tampering.

Please note that when changing the temperature the according adjustment may take some time to get the system in complete balance again. The T-JUST is factory pre-set to +60°C. Further a minimum ΔT of 5°C between the hot-water tank and the temperature set on the T-JUST at the critical tapping point is recommended to allow the expected heat loss in the circulation pipe.

By-Pass Operation

Manual by-pass operation is carried out simply by removing the black cover and placing the red plastic ring on top of the T-JUST. Placing the black cover above the red by-pass ring and screwing it on tightly will put the thermostatic function out of action and allow maximum water temperature to flow through as long as the top cover is tightened with the red by-pass ring as distance piece.

Alternatively the pasteurization of the water can be carried out automatically by means of a small standard ON/OFF actuator controlled by either the BMS-system or a local timer. Using the BMS-system, duration and maximum temperature of the dis-infection process can be programmed to meet customer demands.

The by-pass cannot be regulated since the by-pass function is only necessary during flushing and the thermostatic control during this period of time will be non-existing. Maximum opening means minimum resistance which again means lesser time for flushing.

Technical Data

For further information and part number selection please see individual FlowCon tech note.
For latest updates please see ***www.flowcon.com.***

			A/AB/ABV DN15/20/25 with T-JUST cartridge	FF-Unit with T-JUST cartridge
Static Pressure		(kPa)	1000	1000
		(psi)	145	145
Temperature Rating (media / ambient)		(ºC)	0 to +85 / 0 to +60	0 to +85 / 0 to +60
		(ºF)	+32 to +185 / +32 to +140	+32 to +185 / +32 to +140
Pressure Drop Data			NOTE: For pump head calculations, add the minimum pressure differential for the index circuit to the other components pressure losses (i.e. valves, coil, etc.)	
Valve with T-JUST	(Kv-value)	(m^3/hr)	1.1	1.1
	(Cv-value)	(GPM)	1.3	1.3

T-JUST Cartridge		T-JUST
Temperature Range	(ºC)	+35 to +65
	(ºF)	+95 to +149
Max. Pressure Differential	(kPaD)	100
	(psid)	14.5

Design Example

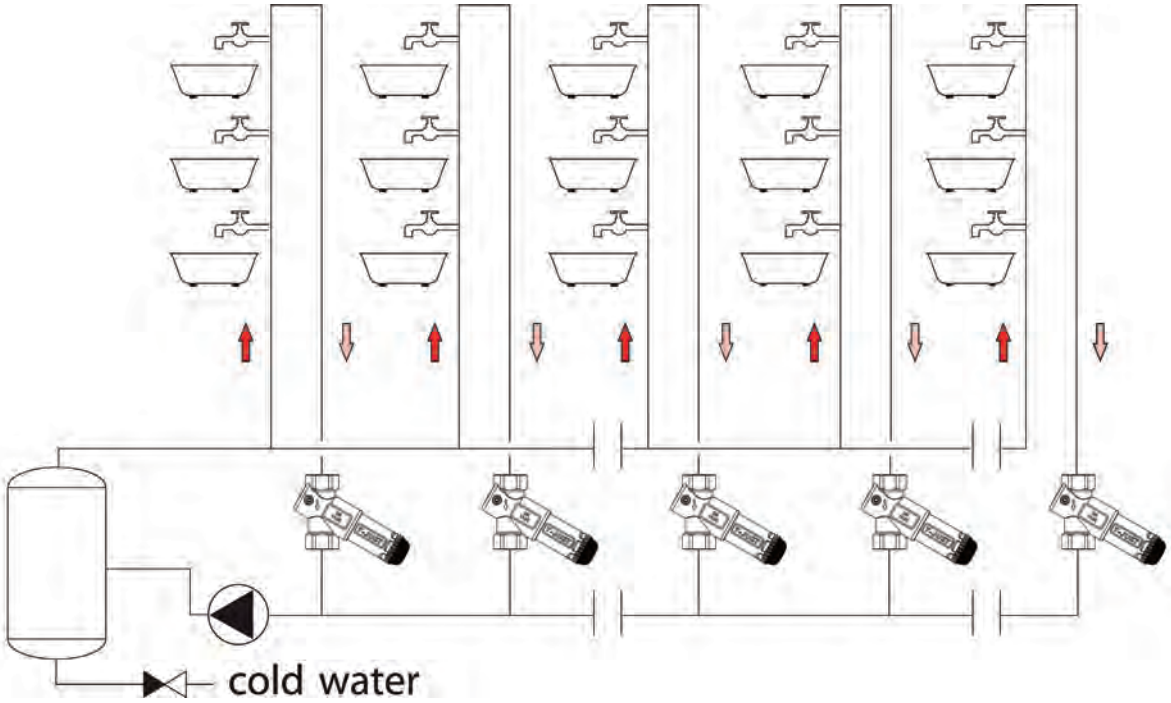

FlowCon T-JUST

Thermostatic Valve for Domestic Water

SPECIFICATIONS

Insert:

Pressure rating:	1000 kPa / 145 psi
Temperature rating, media:	0°C to +85°C / +32°F to +185°F
Temperature rating, ambient:	0°C to +60°C / +32°F to +140°F
Material:	
- Cartridge:	PPS, Polyphenylene sulfide
- Element:	Wax
- Body:	Forged brass ASTM CuZn40Pb2
- Spring:	Stainless steel AISI 302
- Internal components:	PPS, Polyphenylene sulfide
- O-rings:	EPDM
Max. Kv-value:	1.10 m^3/h
Max. differential pressure:	100 kPaD / 14.5 psid
Temperature range:	+35°C to +65°C / +95°F to +149°F

Valve:

Material:	
- Body:	Forged brass ASTM CuZn40Pb2 or DZR brass CW602N CuZn36Pb2AS
- Ball valve:	ABV: Chemically nickel plated brass ball
End connections:	A: Fixed female ISO
	AB: Fixed female ISO
	ABV: Union end conn. in brass alloy ISO
	FF-unit: Female ISO inlet; male ISO outlet

SPECIFICATIONS (continued)

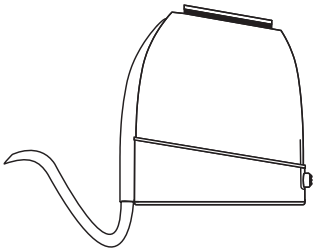

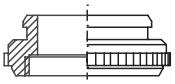

Type EV.0.3.R, EV.0.4.R
Valve adaptor, red

Electrical:

TYPE EV.0.3.R[1], EV.0.4.R[1]

Voltage:	EV.0.3.R – 230V AC
	EV.0.4.R – 24V AC
Control:	ON/OFF, normally closed[2]
Operating power:	1.8 Watt
Dead time / hold time:	30 – 60 sec
Closing and opening time:	Approx. 3 min
Ambient temperature:	0°C to +60°C
Protection:	IP54, class II
Cable:	1 meter fixed cable

Note 1: FlowCon warranty is voided using other actuators than supplied or recommended by FlowCon International A/S.
Note 2: To ensure that the valve is in an open position during commission of the system, the actuator will be delivered in a normal open position and remain in this position until it is electrically operated first time.

DIMENSIONS AND WEIGHTS (NOMINAL) (measured in mm unless noted)

FlowCon T-JUST with FlowCon A-body

Valve size	Insert size	L	H1	H2	H3 (with actuator - not shown)	Weight (kgs.)
15	20	80	97	31	130	0.61
20						0.56

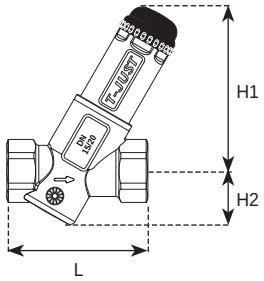

FlowCon T-JUST with FlowCon AB-body

Valve size	Insert size	L	H1	H2	H3 (with actuator - not shown)	Weight (kgs.)
15	20	82	97	31	130	0.60
20		94				0.64

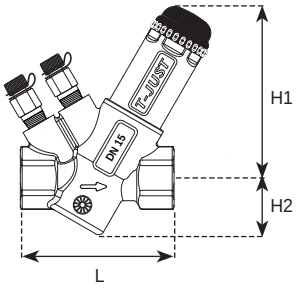

FlowCon T-JUST with FlowCon ABV1-body

Valve size	Insert size	L	H1	H2	H3 (with actuator - not shown)	End connections C[2]			Weight (kgs.) (w/o end conn.)
						ISO female	ISO male	US Sweat	
15	20	122	97	34	130	22	25	20	1.20
20						22	25	20	
25						N/A	39	22	

Note 2: Add end connection length to body length.

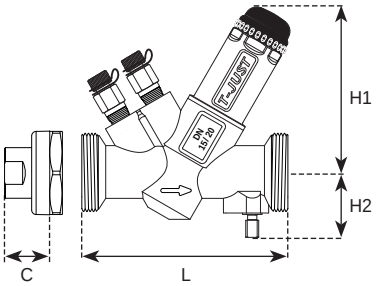

FlowCon T-JUST with FF-unit[3]

Valve size	Insert size	L	H1	H2	H3 (with actuator - not shown)	Weight (kgs.)
-	20	56	97	32	130	0.59

Note 3: To be fitted as upgrading element.

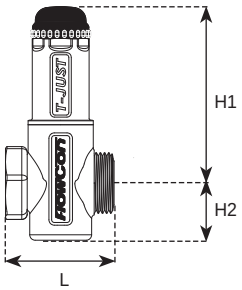

MODEL NUMBER SELECTION

T-JUST . _____ . _____ . _____ . _____ . __I__ . _____

Insert body size:
1=A-body 15mm
2=A-body 20mm
3=A-body 25mm
4=AB-body 15mm
5=AB-body 20mm
6=AB-body 25mm
7=ABV1-body 15/20/25mm
9=FF-unit 20mm

Insert p/t plug requirements (on AB and ABV-bodies):
P=taps plugged B=pressure/temperature plugs O=taps open

Insert union end connections (if ABV-body):

Body size	Female threaded	Male treaded	Sweat
Union end 15-25mm with T-JUST insert	E=15mm=1/2” F=20mm=3/4”	H=15mm=1/2” I=20mm=3/4” J=25mm=1”	K=15mm L=18mm M=22mm

Insert connection standard:
I=ISO

Insert valve body material:
B=standard brass D=DZR brass R=Stainless steel (only A 20mm ISO)

Example: T-JUST4.P.I.B=AB 15mm ISO female threaded standard brass body with plugs and T-JUST insert.

APPLICATIONS

The FlowCon T-JUST, to be used in either FlowCon A, AB, ABV1 bodies or the FF-unit, is designed for domestic hot water installations with circulation. The FlowCon T-JUST automatically controls the temperature of the water that circulates through the valve and therefore the thermal balance is ensured throughout the domestic hot water system.

The T-JUST will from factory be pre-set to +60°C. Temperature setting is easy – simply remove the black top cover and set the temperature by means of a FlowCon adjustment key. If for instance a water temperature of +55°C is needed, the T-JUST is set to the temperature of +55°C. If the temperature of the circulating water is below +55°C, T-JUST opens and more water will pass through. If the temperature is higher than +55°C, T-JUST closes. The black top cap must be screwed tightly on the T-JUST to activate the thermostatic control (and to avoid tampering).

The by-pass function can be carried out either manually by installing the red by-pass ring (used as indicator) or by means of an on/off actuator. The by-pass will force the T-JUST to fully open and set the temperature control out of action. This function is used to avoid bacterial problems such as Legionella and therefore it is recommended to flush the system regularly, flushing one branch at a time for a recommended period of time. For manual by-pass, adapt the red by-pass ring on the T-JUST and screw the black cap tight for the flushing period. When using automatic by-pass, the actuator can be either timer controlled or controlled by the BMS-system.

For the valve to work efficiently, a certain heat loss must be present, and since the pipes are normally insulated, insulation of the valve is not necessary. Without insulation of the valve, the valve will operate under optimal working conditions and temperature regulation will be more accurate. If insulation is required the valve will still function, but regulation will be less precise.

ACCESSORIES

- Blind cap: ACC0080 (cap without a cartridge for flushing out the system)
- Adjustment key: ACC0001
- Manuel by-pass ring: ACC0002 (ring for manual by-pass; 10 pcs. per package)
- Replacement cap, black: ACC0003.

GENERAL SPECIFICATIONS

1. THERMOSTATIC VALVES FOR DOMESTIC WATER - FLOWCON T-JUST

1.1. Contractor shall install thermostatic valves where indicated in drawings.
1.2. Temperature regulation unit shall be available as a plug-in device for an in-line valve housing and the adjustable element shall be out of contact with the circulating water.

2. VALVE ACTUATOR

2.1. Actuator shall provide a visual indication of the valve position.
2.2. The valve shall be closing when the actuator is not powered.
2.3. The valve shall withstand a shut off pressure of at least 400 kPa without allowing internal leakage.
2.4. The seat plug shall be manufactured of EPDM rubber.
2.5. The packing box for sealing the stem shall be removable with the system in operation, without allowing external leakage.

3. VALVE HOUSING

3.a. **FlowCon A**

3.a.1. Valve housing shall consist of forged brass ASTM CuZn40Pb2, rated at no less than 2500 kPa static pressure and +120ºC.
3.a.2. Valve housing shall be permanently marked to show direction of flow.
3.a.3. Housing shall be configured for temperature regulation unit accessibility.

OR….

3.b. **FlowCon AB**

3.b.1. Valve housing shall consist of forged brass ASTM CuZn40Pb2, rated at no less than 2500 kPa static pressure and +120ºC.
3.b.2. Valve housing shall be permanently marked to show direction of flow.
3.b.3. Optional pressure/temperature test plugs for verifying accuracy of flow performance shall be available for all valve sizes.
3.b.4. Housing shall be configured for temperature regulation unit accessibility.

OR….

3.c. **FlowCon ABV**

3.c.1. Valve housing shall consist of forged brass ASTM CuZn40Pb2, rated at no less than 2500 kPa static pressure and +120ºC.
3.c.2. Valve housing shall be permanently marked to show direction of flow.
3.c.3. Valve ball shall consist of chemically nickel plated brass (ASTM CuZn40Pb2).
3.c.4. Optional pressure/temperature test plugs for verifying accuracy of flow performance shall be available for all valve sizes.
3.c.5. Valve housing shall be double union end constructed with a range of pipe connections available for the appropriate pipe size.
3.c.6. Housing shall be configured for temperature regulation unit accessibility.

OR…

3.d. **FLOWCON FF-UNIT**

3.d.1. Valve housing shall consist of DZR brass CW602N CuZn36Pb2AS, rated at no less then 2500 kPa static pressure and +120°C.
3.d.2. Valve housing shall be permanently marked to show direction of flow.
3.d.3. Housing shall be configured for temperature regulation unit accessibility.

4. TEMPERATURE REGULATION ASSEMBLY / THERMOSTATIC ELEMENT / T-JUST

4.1. Temperature regulation unit shall be manufactured of forged brass ASTM CuZn40Pb2 body, rated at not less than 1000 kPa static pressure and +85°C. Further, the temperature regulation unit shall be manufactured of polyphenylene sulfide cartridge with stainless steel 18-8 spring and wax element.
4.2. Temperature regulation unit shall be readily accessible for change-out or maintenance.
4.3. Temperature regulation unit shall be stepless adjustable to a temperature between +35°C and +65°C; and shall be capable of controlling the temperature within ±2°C of the rated temperature.
4.4. Temperature regulation unit shall be ready for either manual by-pass or actuated by-pass without exchanging the unit.

UPDATES

For latest updates please see www.flowcon.com

FlowCon Mini By-Pass Unit

3 Way Mini By-Pass Unit

SPECIFICATIONS

Pressure rating:	2500 kPa / 360 psi
Temperature rating, media:	-20°C to +130°C / -4°F to +266°F
Material:	
- Body:	Forged brass CW617N (tonval brass)
- Balls:	Chemically nickel plated brass
- Ball seals:	PTFE (reinforced Teflon)
- O-rings:	EPDM
End connections:	Fixed: 20mm male ISO suitable for DN15 EuroCone according to EN215, Annex A, Series S Multiple union end connections available

DIMENSIONS AND WEIGHTS (NOMINAL) (measured in mm unless noted)

Model no.	Size D	W	L	A	End connections C[1]						W2[2]	Weight (kgs.) (w/o end conn.)
					Size	ISO female	ISO male	Compression	Press	Universal		
F3895.X.XX.XX.I.X.X.X	G3/4”	84	62.5	40	15	32.7	29.0	9.4	35.6	4.1	11.3	0.5
					18	n/a	n/a					

Note 1: Add end connection length to body length.
Note 2: Add side-option width to body width (per side-option).

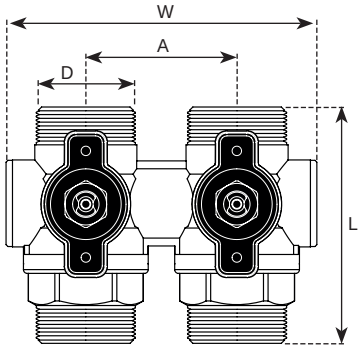

Close-off end of FlowCon Mini By-Pass Unit

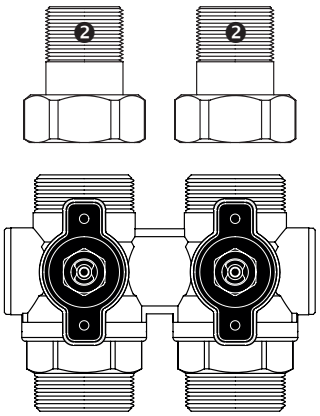

Close-off end of FlowCon Mini By-Pass Unit

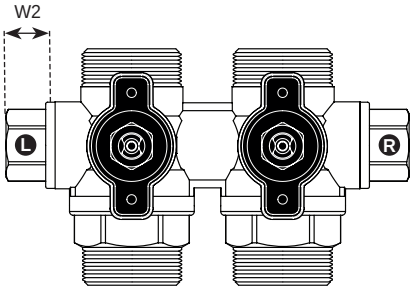

Close-off end of FlowCon Mini By-Pass Unit

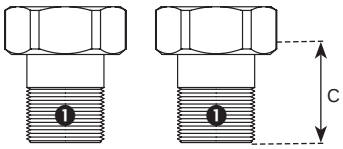

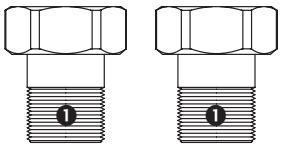

MODEL NUMBER SELECTION

F3895 . ____ . ___ ___ . ___ ___ . ___I___ . _____ . _____ . _____

Insert by-pass size, fixed end:
0=20mm male (ISO) suitable for DN15 EuroCone, no union end connections
2=20mm male (ISO) suitable for DN15 EuroCone, two union end connections
4=four union end connections

Insert connection size and type, union end[3]:
00=no union end connection

Body size	Female threaded - for ISO male threaded pipes	Male threaded - for ISO female threaded pipes	Compression - for copper or soft steel pipes	Press[4] - for (stainless) steel pipes	Universal flat seal - for flat ends with unions
EuroCone end	AG=15mm=1/2”	CG=15mm=1/2”	HG=15mm HR=18mm	FG=15mm FR=18mm	EX=one-size

Insert connection standard:
I=ISO (standard)

Insert handle type:
0=normal handles, no extensions (standard)
E=handles with 4” handle extensions[5]

Insert side-option:
0=blind (standard)
R=1/4” ISO female threaded in right-hand side
L=1/4” ISO female threaded in left-hand side
B=1/4” ISO female threaded in both sides

Insert requirement to unit
0=not assembled
1=assembled
2=assembled and pressure tested

Example: F3895.2.CG.00.I.0.0.1 = FlowCon Mini By-Pass unit, two 20mm ISO male fixed ends suitable for DN15 EuroCone and two 15mm ISO male union ends, no handle extensions, no side-option, assembled.

Note 3: Other end connections and sizes available upon request.
Note 4: Extra width compared to standard option.
Note 5: When handle extensions are used, valves with actuators cannot be fitted in-line wiht handles, but must be tilted.

APPLICATION EXAMPLE

FlowCon Mini By-Pass unit
with FlowCon Green

FlowCon Mini By-Pass unit
with FlowCon EVC

FlowCon Mini By-Pass unit
with FlowCon EVS

FlowCon Mini By-Pass unit with FlowCon Green

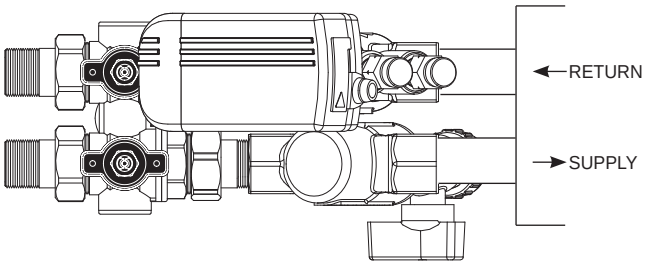

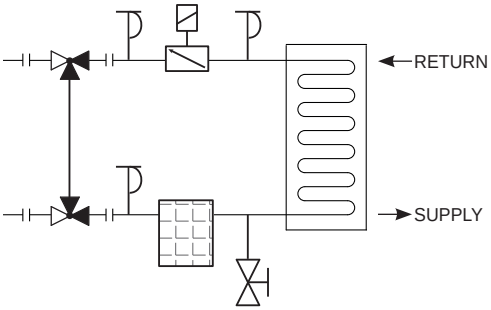

FlowCon Mini By-Pass unit with FlowCon EVC

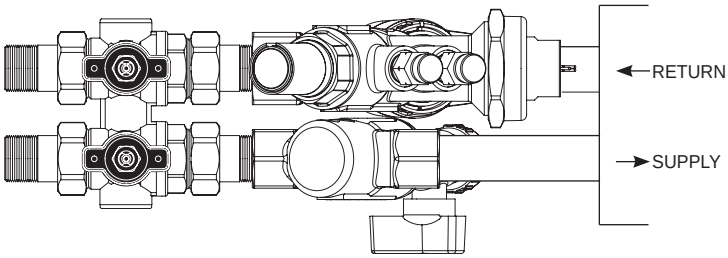

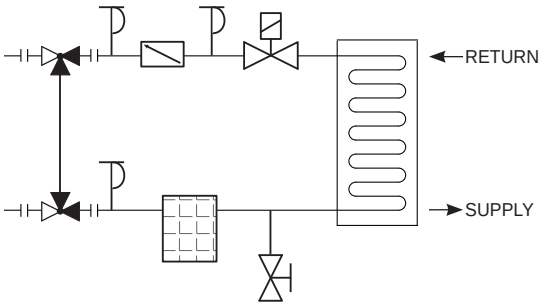

FlowCon Mini By-Pass unit with FlowCon EVS

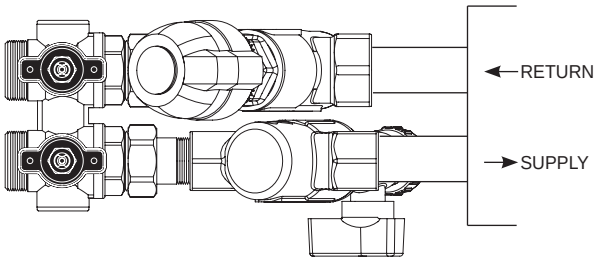

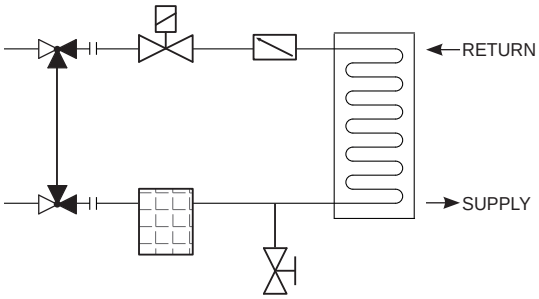

UPDATES

For latest updates please contact FlowCon International or go to www.flowcon.com.

FlowCon By-Pass Unit

3 Way By-Pass Unit

SPECIFICATIONS

Pressure rating:	1000 kPa / 145 psi
Temperature rating, media:	-20°C to +120°C / -4°F to +248°F
Material:	
- Body:	Forged brass ASTM CuZn40Pb2
- Ball valves:	Chemically nickel plated brass balls
- Union end connections:	Brass alloy ISO
- O-rings:	EPDM (70 shore)
End connections:	Fixed end (ISO): 1/2” / 3/4”
	Union end (ISO/NPT):
	FlowCon standard: 1/2” / 3/4” / 1” male, 1/2” / 3/4” female

DIMENSIONS AND WEIGHTS (NOMINAL) (measured in mm unless noted)

Model no.	Size D	L	H1	H2	A	End connections C[1]				Weight (kgs.) (w/o end conn.)
						Size	ISO female	ISO male	Sweat	
F3890.1.M.X.H.H.X.X	15	123.5	106,8	-	80.2	15	22	25	20	1.1
F3890.2.M.X.I.I.X.X	20	123.5	104,8	-	80.2	20	22	25	20	1.1
						25	N/A	39	22	1.1
F3890.4.M.X.X.X.X.X	-	123.5	-	114.8	80.2	15	22	25	20	1.2
						20	22	25	20	1.2
						25	N/A	39	22	1.2

Note 1: Add end connection length to body length.

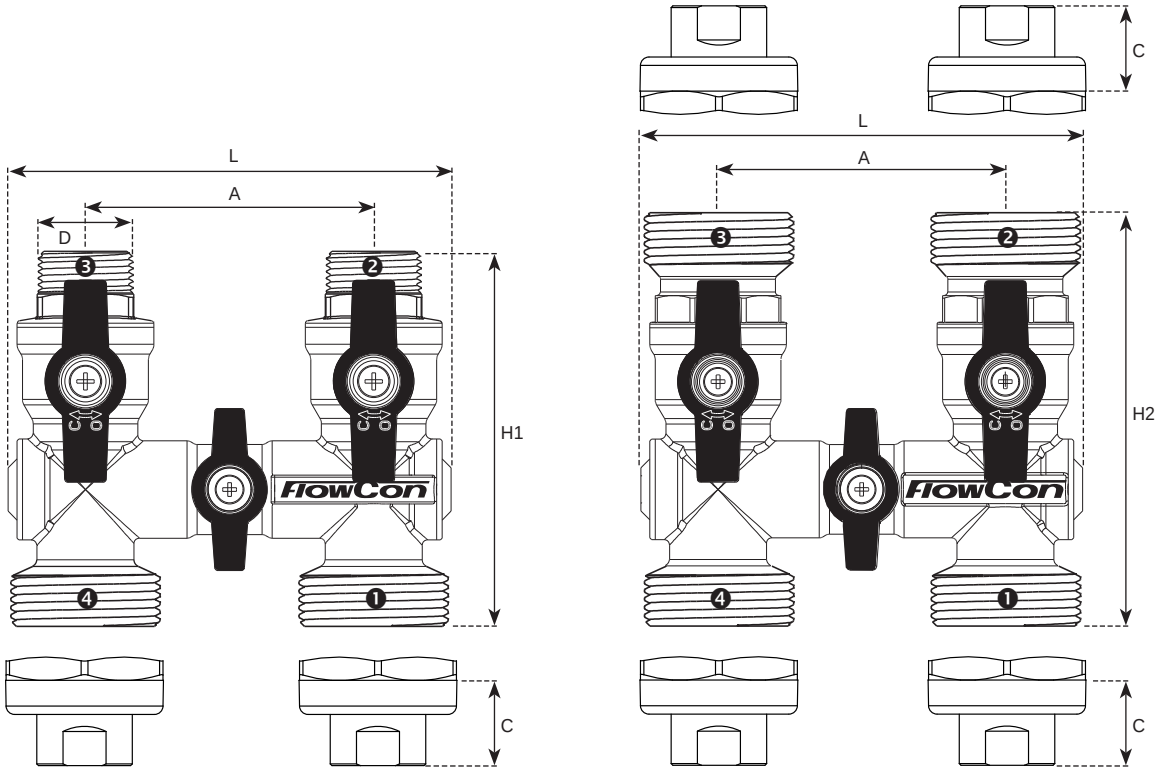

MODEL NUMBER SELECTION

F3890 . ____ . M . ____ . ____ . ____ . ____ . ____ . ____

Insert by-pass size, fixed end:
1=15mm (ISO) 2=20mm (ISO) 4=four union ends connection

Insert connection type, fixed end:
M=male

Insert connection size and type, union end:

Body size	Female threaded	Male treaded	Sweat
Union end 15-25mm, 1/2”-1”	E=15mm=1/2” F=20mm=3/4”	H=15mm=1/2” I=20mm=3/4” J=25mm=1”	K=15mm L=18mm M=22mm

Insert connection standard:
I=ISO (standard) N=NPT (not available for fixed ends)

0=not assembled
1=assembled
2=assembled and pressure tested

Example: F3890.1.M.H.H.H.H.I.0=By-pass unit, fixed end 15mm ISO male and union end 15mm ISO male, not assembled.

APPLICATION EXAMPLE

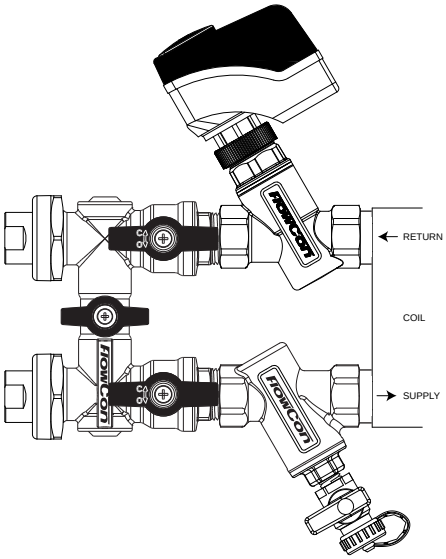

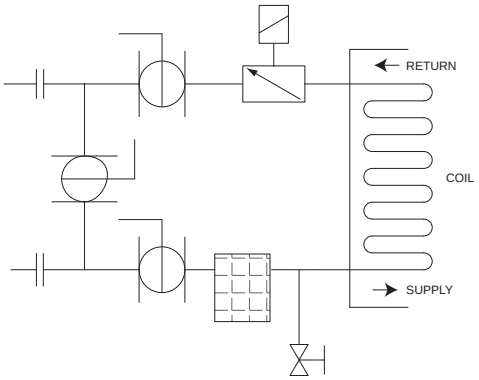

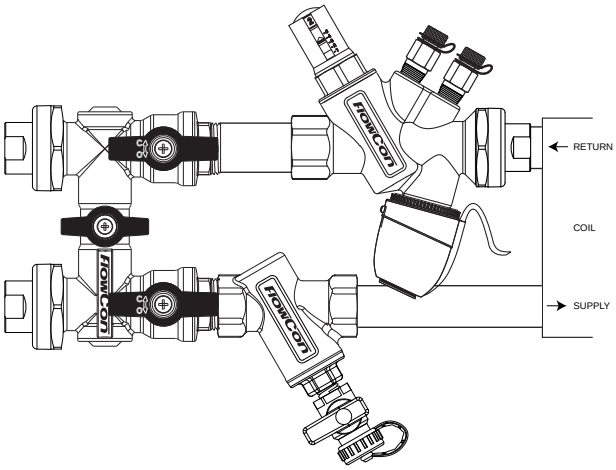

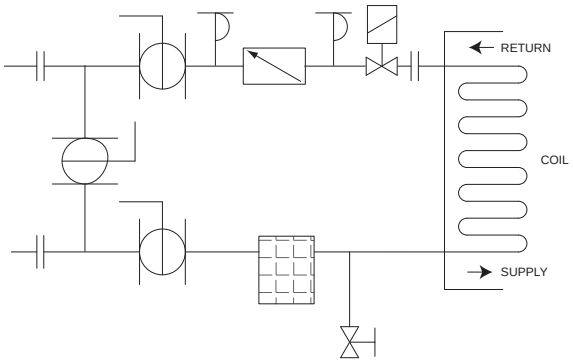

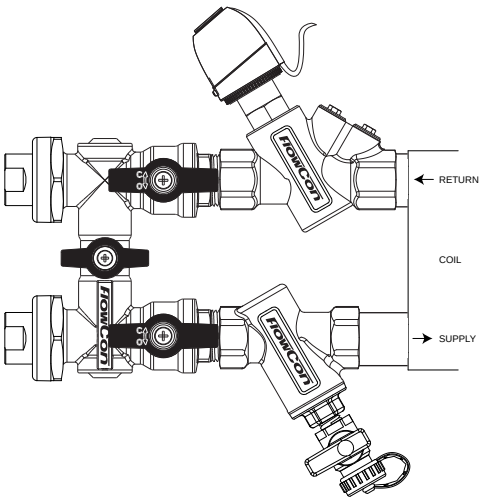

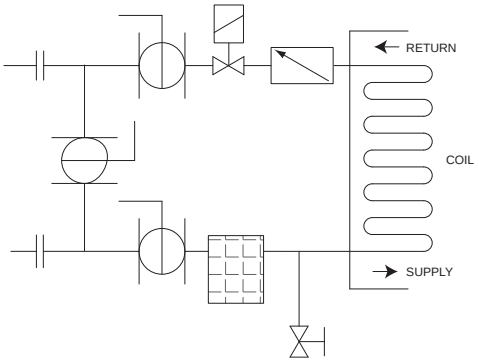

UPDATES

For latest updates please see www.flowcon.com

FlowCon Strainer 15-40mm

Strainer Valve

SPECIFICATIONS

Pressure rating:	2500 kPa / 360 psi
Temperature rating, media:	-20°C to +120°C / -4°F to +248°F
Material:	
- Strainer:	250µ (=60 mesh) stainless steel

Valve:

Material:	
- Body:	Forged brass ASTM CuZn40Pb2
- Ball valve:	ABS: Chemically nickel plated brass ball
End Connections:	A: Female ISO or NPT
	AB: Female ISO or NPT
	ABS: Union end connections in brass alloy ISO or NPT

DIMENSIONS AND WEIGHTS (NOMINAL) (measured in mm unless noted)

Valve model	Valve size	Strainer size	L	H1	H2	End connections C[1]			Weight[2] (kgs.) w/o end conn.
						ISO female	ISO male	Sweat	
A	15	20	80	31	79	-	-	-	0.48
	20								0.45
	25		91						0.49
AB	15	20	82	31	79	-	-	-	0.47
	20		94						0.53
	25		102						0.59
	25	40	82	47	104	-	-	-	1.90
	32		94						1.70
ABS1	15	20	122	33	79	22	25	20	0.75
	20					22	25	20	
	25					-	39	22	
ABS2	25	40	122	42	104	22	25	20	2.10
	32					22	25	20	
	40					-	39	22	

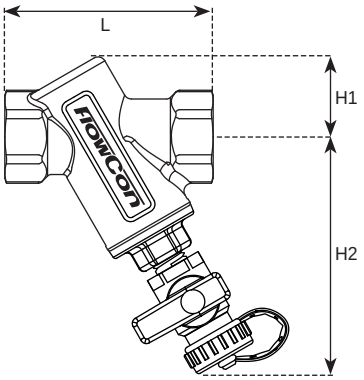

Note 1: Add end connection length to body length.
Note 2: Weight of valvebody with blind cap and blind plugs (without union end connections).

MODEL NUMBER SELECTION

S . ____ . ____ . ____ . ____ . ____ . ____ . ____

Insert type of cap:
0=No cap 1=Cap 2=Cap and Blowdown

Insert type of body:
20mm Strainer: 01=AB15 02=AB20 03=ABS1 04=A15 05=A20 06=A25 07=AB25
40mm Strainer: 15=ABS2 21=AB25 22=AB32

Insert p/t plug requirements:
Leave it blank if no p/t plugs are required B=pressure/temperature plugs P=taps plugged

Insert inlet x outlet union end connections - leave it blank if A- or AB-body or no end connections required:

Body size	Female threaded	Male treaded	Sweat
Union end 15-25mm, 1/2”-1”	E=15mm=1/2” F=20mm=3/4”	H=15mm=1/2” I=20mm=3/4” J=25mm=1”	K=15mm L=18mm M=22mm

Insert connection standard:
I=ISO N=NPT

Example: S.1.01.P.I=Strainer in AB 15mm ISO female threaded body with plugs.

ACCESSORIES

- Strainer, mesh 60: ACC609002 (DN15/20/25), ACC609003 (DN25/32/40)
- Blind cap: ACC0080 (DN15/20/25), ACC0081 (DN25/32/40) (cap for flushing out the system)
- Blow-down cap: ACC0082 (DN15/20/25), ACC0083 (DN25/32/40) (cap for applying drain valve)
- Drain valve: ACC913302 (1/4”)

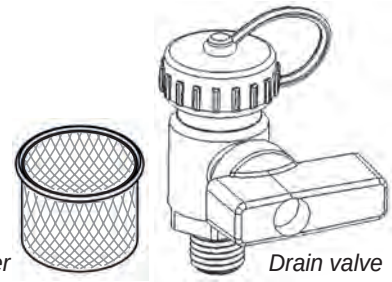

Strainer *Drain valve*

GENERAL SPECIFICATIONS

1. STRAINER - FLOWCON A

1.1. Contractor shall install strainers where indicated in drawings.

1.2. Valve shall consist of strainer, mesh 60.

2. VALVE HOUSING

2.a. **FlowCon A**

2.a.1. Valve housing shall consist of forged brass ASTM CuZn40Pb2, rated at no less than 2500 kPa static pressure and +120ºC.

2.a.2. Valve housing shall be permanently marked to show direction of flow.

2.a.3. Housing shall be configured for strainer unit accessibility.

2.a.4. Drain valve shall be available for all valve sizes.

OR….

2b. **FlowCon AB**

2.b.1. Valve housing shall consist of forged brass ASTM CuZn40Pb2, rated at no less than 2500 kPa static pressure and +120ºC.

2.b.2. Valve housing shall be permanently marked to show direction of flow.

2.b.3. Optional pressure/temperature test plugs for verifying performance shall be available for all valve sizes.

2.b.4. Housing shall be configured for strainer unit accessibility.

2.b.5. Drain valve shall be available for all valve sizes.

OR….

2.c. **FlowCon ABS**

2.c.1. Valve housing shall consist of forged brass ASTM CuZn40Pb2, rated at no less than 2500 kPa static pressure and +120ºC.

2.c.2. Valve housing shall be permanently marked to show direction of flow.

2.c.3. Valve housing shall be double union end constructed with a range of pipe connections available for the appropriate pipe size.

2.c.4. Valve ball shall consist of chemically nickel plated brass (ASTM CuZn40Pb2).

2.c.5. Optional pressure/temperature test plugs for verifying performance shall be available for all valve sizes.

2.c.6. Housing shall be configured for strainer unit accessibility.

2.c.7. Drain valve shall be available for all valve sizes.

UPDATES

For latest updates please see www.flowcon.com

FlowCon FAC6HP

FlowCon Commissioning Meter

SPECIFICATIONS

Pressure rating:	2000 kPa / 209 psi
Temperature rating, media:	1°C to +95°C / 33.8°F to +203°F
Temperature rating, ambient when in operation:	1°C to +44°C / 33.8°F to +111°F
IP rating:	IP54
Maximum operational ΔP:	1000 kPaD / 145 psid
Measurement range:	0.5-600 kPaD / 0.07-87 psid.

DIMENSIONS AND WEIGHTS (NOMINAL) (measured in mm unless noted)

Model no.	Description	L1	L2	H1	H2	B (depth)	Weight (kgs.) with and without tubes and needles
FAC6HP	without rubber protection boot	85	117	159	189	31	1.25 / 0.46
	with rubber protection boot	98	123	173	203	42	1.41 / 0.62

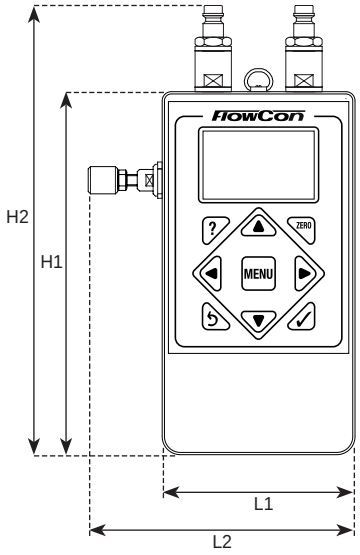

MODEL NUMBER SELECTION

FAC6HP

FlowCon Commissioning Meter

FUNCTIONS

Battery:	9V 6LR61
Connection to PC requires optional software (see the accessories):	USB Mini
Flow characteristics for: FlowCon Composite Cartridge series (20-40mm) FlowCon E-JUST Cartridge series (20-50mm) FlowCon Stainless Steel Cartridge series (20-80mm) FlowCon SH series (15-150mm)	
FlowCon Green Insert series (20-40mm) FlowCon SME Cartridge series (20-40mm)	**Note:** Measurement only to be done either without actuator or with actuator fully open
FlowCon SM series (15-150mm)	**Note:** Measurement only to be done either without actuator or with actuator fully open
Measurement range:	0.5-600 kPaD
Measurement accuracy:	± 0.2 kPaD within 0.5-20 kPaD range ± 1.0% of reading within 20-600 kPaD range
Hysteresis:	± 1.0% of reading within 20-600 kPaD range
Storage:	Default 100 locations. Up to 2000 locations with optional software (see the accessories options)
DP units:	Pa, kPa, bar, m H_2O, mm H_2O, cm H_2O, psi, feet H_2O, inches H_2O
Flow units:	l/s, l/min, l/h, (imperial) gpm, (US) gpm.

ACCESSORIES

- Set of 1m tubes with snap connectors: ACC6000
- Set of 3.3mm p/t needle for snap connectors, straight, incl. protection pipe (to be removed before use): ACC6001
- Set of 3.3mm p/t needle for snap connectors, angle, incl. protection pipe (to be removed before use): ACC6002
- Set of 3.3mm p/t needle for snap connectors, extra long and straight, incl. protection pipe (to be removed before use): ACC6003
- Set of 3.3mm p/t needle for snap connectors, extra long and angle, incl. protection pipe (to be removed before use): ACC6004
- Software for calculations of flow in wafers and/or administration of larger projects: ACC6010.

GENERAL DESCRIPTION

The FlowCon FAC6HP is an electronic manometer programmed to carry out differential pressure measurements on FlowCon's dynamic balancing valves and other balancing valves.
The state-of-the-art software and complete database of FlowCon's dynamic balancing valves allows direct reading of differential pressure and flow. The nine button design allows simple navigation of the menu system with all parameters visible on screen.

CARRY CASE

The commissioning meter is supplied in a carry case with foam inlay for protection of the items inside.
The carry case contains:

- FAC6HP commissioning meter including fittings for snap connectors and protection caps for fittings
- Set of 1m tubes with snap connectors (ACC6000)
- Set of 3.3mm p/t needles for snap connectors, angle, incl. protection pipe (to be removed before use) (ACC6002)
- Set of 3.3mm p/t needles for snap connectors, straight, incl. protection pipe (to be removed before use) (ACC6001)
- Extra 9V 6LR61 battery
- FlowCon adjustment key
- 6-in-1 screw driver (for PH 1-2-3 and PZ 1-2-3)
- Hexagon (allen) keys (sizes 3.0, 4.0, 5.0, 6.0 and 8.0mm)
- Mechseal key
- Extra protection caps for commissioning meter fittings
- Key hanger for hanging commissioning meter from pipes etc.

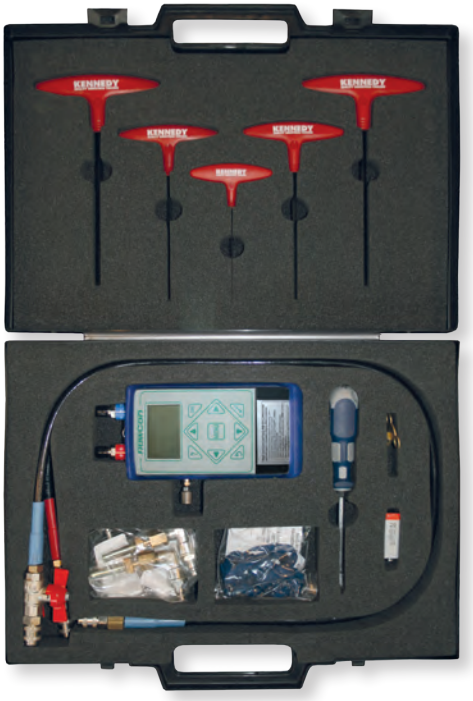

APPLICATION EXAMPLE

FlowCon commissioning meter connected to a FlowCon AB-valve with pressure/temperature plugs and FlowCon Green insert, without actuator.
Note: Measurement only to be done either without actuator or with actuator fully open.

FlowCon commissioning meter display:

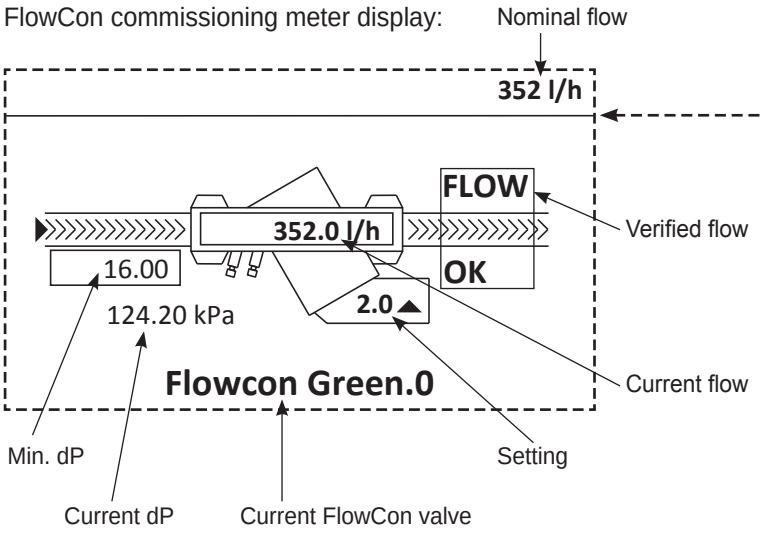

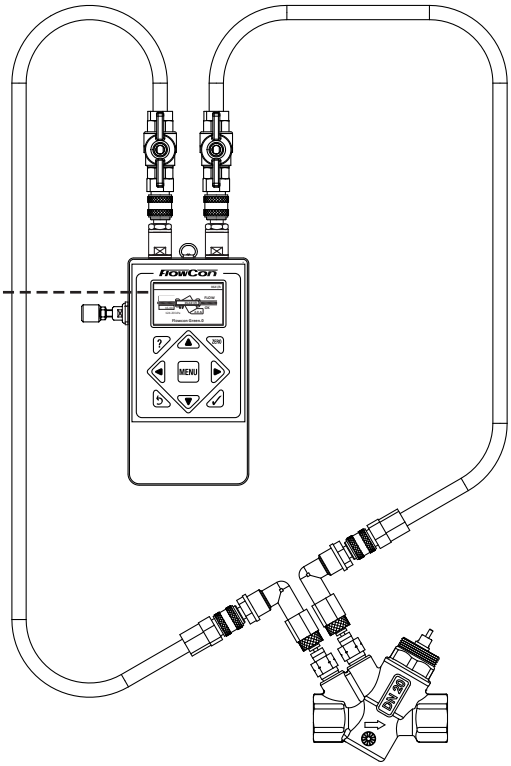

UPDATES

For latest updates please see www.flowcon.com