# GREYSTONE
ENERGY SYSTEMS INC

# ROOM HUMIDITY TRANSMITTER
# RH100B Series

The RH100B series uses a highly accurate and reliable Thermoset Polymer based capacitance humidity sensor and state-of-the-art digital linearization and temperature compensated circuitry in an attractive, low profile enclosure to monitor room humidity levels.

An optional temperature sensor is available.


## SPECIFICATION:

| | |
|---|---|
| Sensor Type | Thermoset Polymer based capacitive |
| Accuracy | ±2, 3, or 5% RH, (5% to 95% RH) |
| Measurement Range | 0 to 100% RH |
| Temperature Dependence | ±0.05% RH/ ˚C |
| Hysteresis | ±1.5% RH maximum |
| Repeatability | ±0.5% RH typical |
| Linearity | ±0.5% RH typical |
| Sensor Response Time | 15 seconds typical |
| Stability | ±1% RH typical at 50% RH in 5 yrs. |
| Operating Temperature | 0˚ to 70˚C (32˚ to 158˚F) |
| Operating Humidity | 0 to 95% RH non-condensing |
| Power Supply | 18 to 35 Vdc, 15 to 26 Vac |
| Consumption | 22 mA maximum |
| Input Voltage Effect | Negligible over specified operating range |
| Protection Circuitry | Reverse voltage protected and output limited |
| Output Signal | 4-20 mA current loop, 0-5 or 0-10 Vdc (jumper-selectable) |
| Output Drive at 24 Vdc | 550 Ω max for current output<br>10K Ω min for voltage output |
| Internal Adjustments | Clearly marked ZERO and SPAN pots |
| Wiring Connections | Screw terminal block (14 to 22 AWG) |
| Optional Temp. Sensor | Various RTDs and thermistors available as two-wire resistance output (See Ordering Chart) |
| Enclosure | White ABS, IP20 (Nema 1) |
| Dimensions | 70x114x30mm, (2.75"w x 4.5"h x 1.2"d) |

**PART NUMBER SELECTED**

## PRODUCT SELECTION INFORMATION:

| MODEL | Product Description |
|---|---|
| RH100B | Room Humidity Transmitter |

| CODE | Accuracy |
|---|---|
| 02 | 2% |
| 03 | 3% |
| 05 | 5% |

| CODE | Optional Temperature Sensor |
|---|---|
| L | 100Ω Platinum, IEC 751, 385 Alpha, thin film |
| C | 1000Ω Platinum, IEC 751, 385 Alpha, thin film |
| F | 1801Ω, NTC Thermistor, ±0.2˚C |
| E | 3,000Ω, NTC Thermistor, ±0.2˚C |
| D | 10,000Ω, type 3, NTC Thermistor, ±0.2˚C |
| J | 10,000Ω, type 2, NTC Thermistor, ±0.2˚C |
| K | 20,000Ω, NTC Thermistor, ±0.2˚C |
| M | 1000 Ω Nickel, Class B, DIN 43760 |
| B | 10k Ω Type 3, NTC Therm, ±0.2 C c/w 11K shunt Resistor |
| G | 2.252KΩ Thermistor, ±0.2 C |

Greystone Energy Systems, Inc. reserves the right to make design modifications without prior notice.

## TYPICAL INSTALLATION:

**For complete installation and wiring details, please refer to the product installation instructions.**

The RH100 sensor installs directly on a standard electrical box and should be mounted five feet from the floor of the area to be controlled. Do not mount the sensor near doors, opening windows, supply air diffusers or other known air disturbances. Avoid areas where the sensor is exposed to vibrations or rapid temperature changes.

A terminal is provided for connection to the Building Automation System.

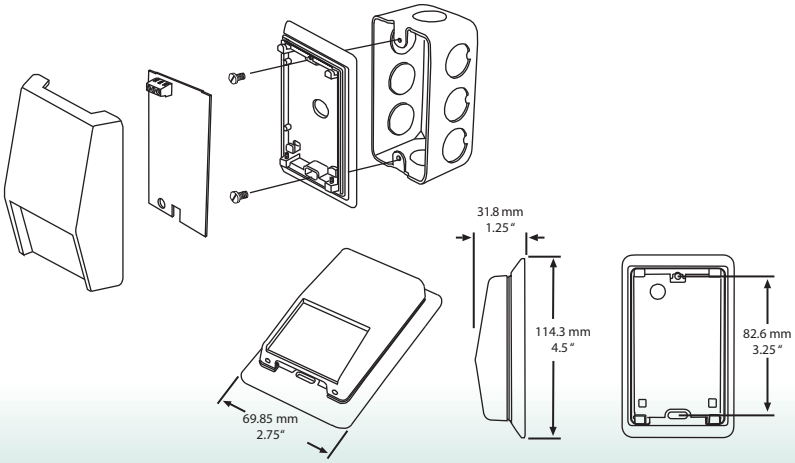


Greystone Energy Systems, Inc. (506) 853-3057 Fax: (506) 853-6014
150 English Drive, Moncton, North America: 1-800-561-5611
New Brunswick, Canada E1E 4G7 e-mail: mail@greystoneenergy.com
www.greystoneenergy.com

RoHS COMPLIANT



PS-RH100B-01-01 01/14
PRINTED IN CANADA